umotion.ru +7(499) 350-62-38 sales@umotion.ru

UNIMOTION

LINEAR UNITS

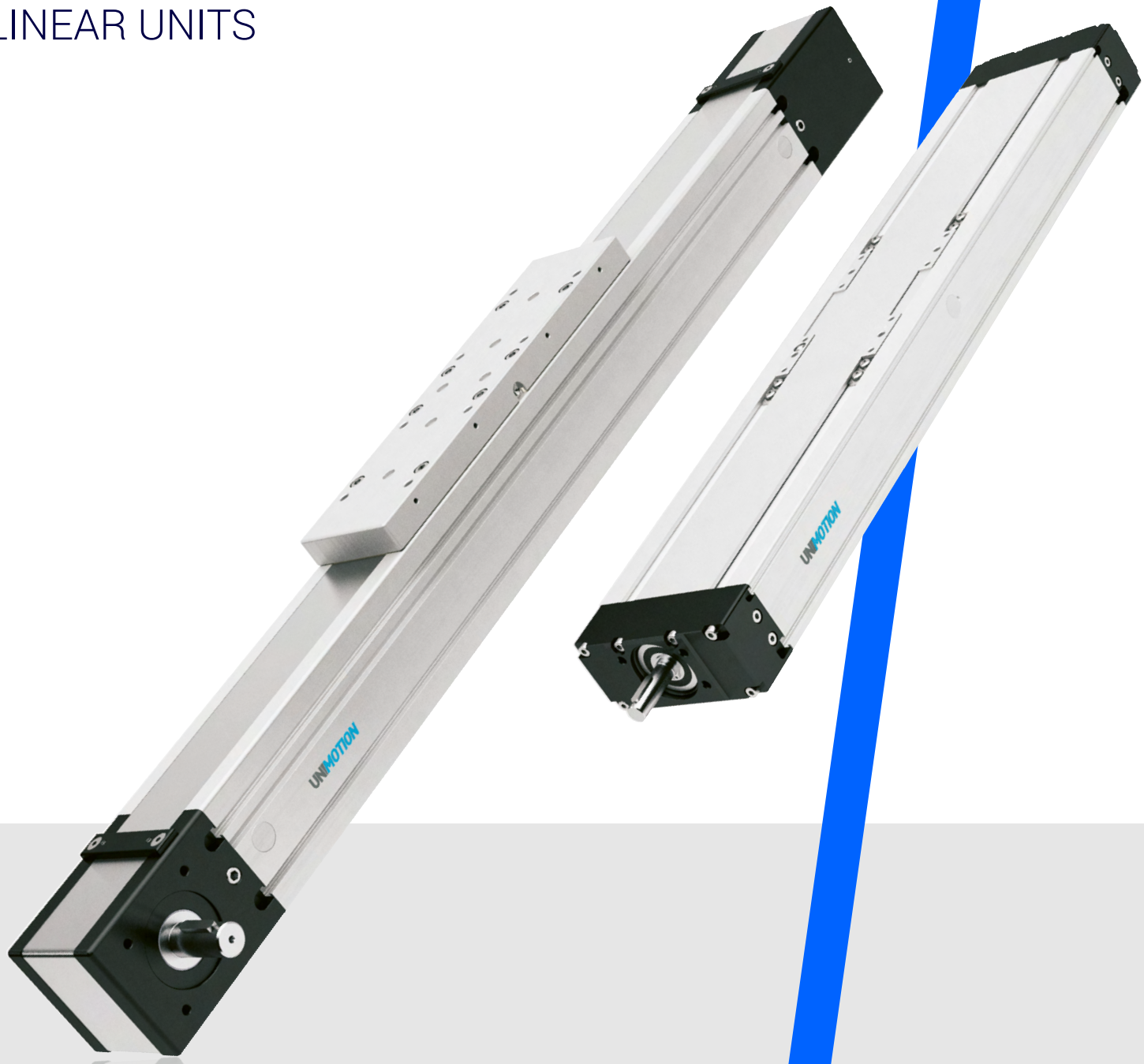

About Us

Our company was established in 1990 and, since then, it is privately owned. After 7 years of experience in metal processing as a contractor, the company Hypex (Unimotion) was created and operated in the following areas: special purpose machinery manufacture with its own development, trade and assembly in the area of industrial automation.

Due to many years of engineering and substantial engagement in individual problem solving processes, extensive knowledge and experience in the development and manufacture of linear and handling systems were gained. Today we produce mechanical linear units, compact linear units, multi-axis systems as well as customised solutions for high dynamic demands.

Our company's premises, which cover an area of 4500m², offer room for our 75 employees. Production, construction, administration and warehouse; all this can be found under one roof.

Our modern machinery with CNC machining centres and CNC automatic lathes enables high-precision manufacture and really high in-house production depth. For example, we ourselves manufacture shaft drives with tooth washers and our screw ends. This is why, quality, reliability, a good price/performance ratio and short delivery times are harmonised to perfection.

Thus, in the production of our standard linear units as well as individual and complex special linear units, we can guarantee high capacity, flexibility and precision.

At the moment, we export our products in more than 30 countries. Inspired by our customers' demands, Hypex (Unimotion) constantly develops new products and system solutions. So you are welcome to contact us. We look forward to meet you and work on your special project!

Unimotion products have the quality and standards to meet the requirements of the modern market.

Unimotion Products

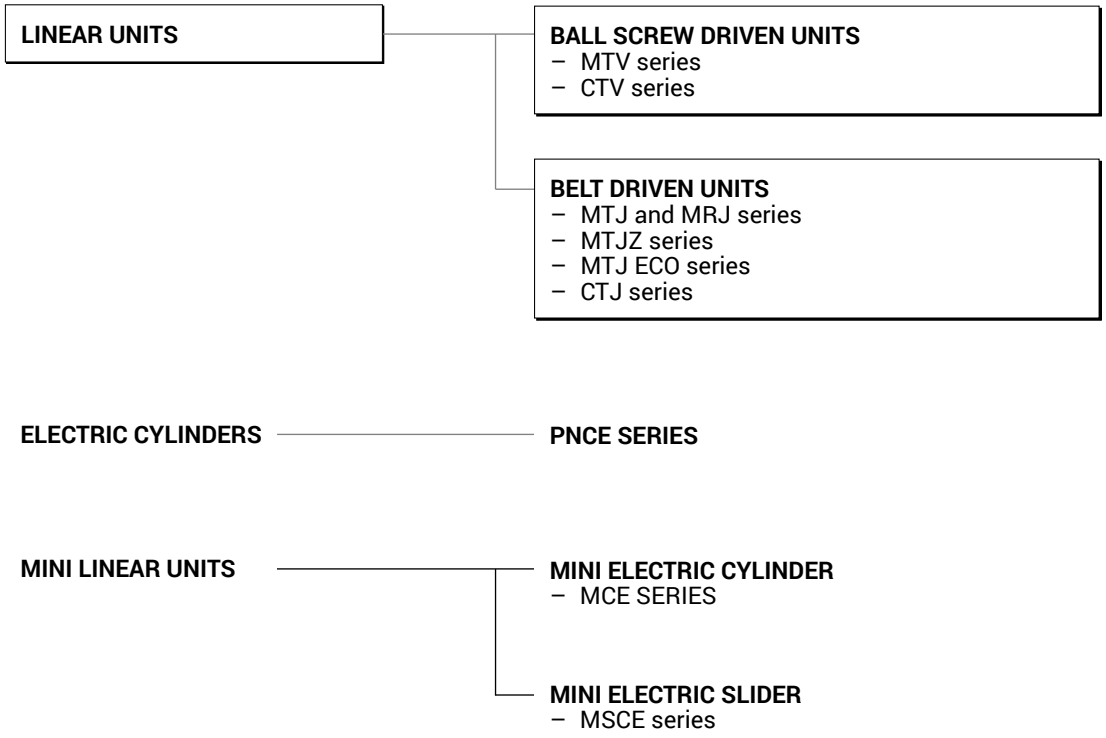

Table of Contents

Overview 1.000.0



MTJ / MRJ 2.000.0



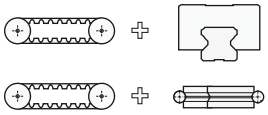

MTV 3.000.0





MTJ ECO 4.000.0





MTJZ 5.000.0





CTJ 6.000.0





CTV 7.000.0





ACCESSORIES 8.000.0



SERVICE LIFE / PERMISSIBLE LOAD FACTOR 9.000.0



Overview

BELT DRIVEN LINEAR UNITS

MTJ / MRJ

Page 2.000.0

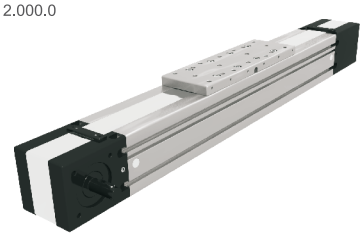

DRIVE

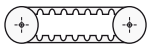

GUIDE

MTJ MRJ

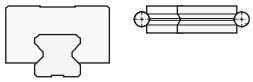

FEATURES

- High speed
- High acceleration
- Large stroke lenghts
- Good repeatability

Linear Unit	Dynamic load capacity		Max. travel speed	[1] Max. profile length	Max. repeatability	Dimensions	
	Cy [N]	Cz [N]	[m/s]	[mm]	[mm]	[2] Width [mm]	[3] Height [mm]
MTJ 40	4610		6	3000	± 0,08	40	52
MTJ 65 S	9900		6	6000	± 0,08	65	85
MTJ 65 L	19800		6	6000	± 0,08	65	85
MTJ 80 S	17100		6	6000	± 0,08	80	100
MTJ 80 L	34200		6	6000	± 0,08	80	100
MTJ 110 S	24800		6	6000	± 0,08	110	129
MTJ 110 L	49600		6	6000	± 0,08	110	129
MRJ 40	3400	1700	10	6000	± 0,08	40	52
MRJ 65 L	8600	4400	10	6000	± 0,08	65	85
MRJ 80 L	17100	9000	10	6000	± 0,08	80	100
MRJ 110 L	31000	14000	10	6000	± 0,08	110	129

[1] *For lengths over the stated value in the table above please contact us.* [2] *Profile* [3] *Profile + carriage*

CTJ

Page 6.000.0



DRIVE

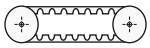

GUIDE

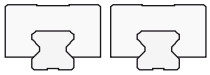

FEATURES

- High speed
- High acceleration
- Large stroke lenghts
- Good repeatability
- High load capabilities
- High flexural rigidity

Linear Unit	Dynamic load capacity		Max. travel speed	[1] Max. profile length	Max. repeatability	Dimensions	
	Cy [N]	Cz [N]	[m/s]	[mm]	[mm]	[2] Width [mm]	[3] Height [mm]
CTJ 90 S	4620		5	6000	± 0,08	90	40
CTJ 90 L	9240		5	6000	± 0,08	90	40
CTJ 110 S	19800		6	6000	± 0,08	110	50
CTJ 110 L	39600		6	6000	± 0,08	110	50
CTJ 145 S	34200		6	6000	± 0,08	145	65
CTJ 145 L	68400		6	6000	± 0,08	145	65
CTJ 200 S	49600		6	6000	± 0,08	200	100
CTJ 200 L	99200		6	6000	± 0,08	200	100

[1] *For lengths over the stated value in the table above please contact us.* [2] *Profile* [3] *Profile + carriage*

MTJ ECO

Page 4.000.0

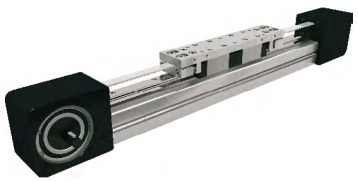

DRIVE

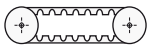

GUIDE

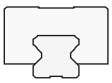

FEATURES

- Excellent price/performance ratio
- High acceleration
- Large stroke lenghts

Linear Unit	Dynamic load capacity		Max. travel speed	[1] Max. profile length	Max. repeatability	Dimensions	
	Cy [N]	Cz [N]	[m/s]	[mm]	[mm]	[2] Width [mm]	[3] Height [mm]
MTJ 40 ECO S	9900		3	5960	± 0,1	40	78
MTJ 40 ECO L	19800		3	5960	± 0,1	40	78

[1] *For lengths over the stated value in the table above please contact us.* [2] *Profile* [3] *Profile + carriage*

BELT DRIVEN LINEAR UNITS

MTJZ

Page 5.000.0

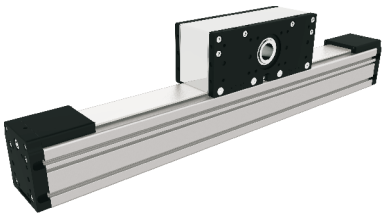

DRIVE

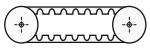

GUIDE



FEATURES

- High speed
- High acceleration
- Large stroke lenghts
- Good repeatability

Linear Unit	Dynamic load capacity		Max. travel speed	[1] Max. profile length	Max. repeatability	Dimensions	
	Cy [N]	Cz [N]	[m/s]	[mm]	[mm]	[2] Width [mm]	[3] Height [mm]
MTJZ 40	4610		5	3000	± 0,08	40	88
MTJZ 65	19800		5	6000	± 0,08	65	143,5
MTJZ 80	34200		5	6000	± 0,08	80	178,5
MTJZ 110	49600		5	6000	± 0,08	110	241

[1] *For lengths over the stated value in the table above please contact us.* [2] *Profile* [3] *Profile + carriage*

BALL SCREW DRIVEN LINEAR UNITS

MTV

Page 3.000.0

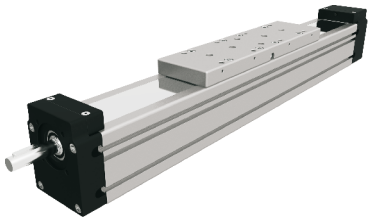

DRIVE



GUIDE



FEATURES

- High repeatability
- Ball screw support system for higher speeds at the same stroke
- High axial load capabilities
- Large stroke lenghts

Linear Unit	Dynamic load capacity		Max. travel speed	[1] Max. profile length	Max. repeatability	Dimensions	
	Cy [N]	Cz [N]	[m/s]	[mm]	[mm]	[2] Width [mm]	[3] Height [mm]
MTV 40	4620		0,97	2920	± 0,01	40	52
MTV 65	19800		1,12	2920	± 0,01	65	85
MTV 80	34200		2,5	5480	± 0,01	80	100
MTV 110	49600		1,6	5850	± 0,01	110	129

[1] *For lengths over the stated value in the table above please contact us.* [2] *Profile* [3] *Profile + carriage*

CTV

Page 7.000.0



DRIVE



GUIDE

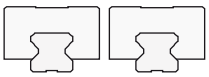

FEATURES

- High repeatability
- High load capabilities
- High flexural rigidity

Linear Unit	Dynamic load capacity		Max. travel speed	[1] Max. profile length	Max. repeatability	Dimensions	
	Cy [N]	Cz [N]	[m/s]	[mm]	[mm]	[2] Width [mm]	[3] Height [mm]
CTV 90 S	4620		0,97	750	± 0,01	90	40
CTV 90 L	9240		0,97	750	± 0,01	90	40
CTV 110 S	19800		1,12	1500	± 0,01	110	50
CTV 110 L	39600		1,12	1500	± 0,01	110	50
CTV 145 S	34200		2,5	1800	± 0,01	145	65
CTV 145 L	68400		2,5	1800	± 0,01	145	65
CTV 200 S	49600		1,6	2200	± 0,01	200	100
CTV 200 L	99200		1,6	2200	± 0,01	200	100

[1] *For lengths over the stated value in the table above please contact us.* [2] *Profile* [3] *Profile + carriage*

In order to improve the products in this catalogue the specifications are subject to change without notice.

MTJ / MRJ

CHARACTERISTICS

MTJ and **MRJ** Linear Units with toothed belt drive and compact dimensions provide high performance features such as, high speed, good accuracy and repeatability.
They can easily be combined to multi-axis systems.
Excellent price-/performance ratio and quick delivery time are ensured.
The compact, precision-extruded aluminum Profile from 6063 AL with integrated Zero-backlash Ball rail guide system, allows high load capacities and optimal cycles for the movement of larger masses at high speed.
For very high speeds, up to 10m/s, the Track Rollers (journal Bearings) of the type MRJ are particularly suitable.
In the Linear Units MTJ and MRJ is used a pre-tensioned steel reinforced AT polyurethane timing toothed belt. In conjunction with a Zero-backlash drive pulley high moments with alternating loads with good positioning accuracy, low wear and low noise can be realized.
The in the Profile slot driving Polyurethane timing belt protects all the parts in the Profile from dust and other contaminations. As optional, a corrosion-resistant protection strip is available.
The aluminum profile includes T-slots for fixing the Linear Unit and for attaching sensors and switches. Also, a Reed switch can be used here.
Different carriage lengths with central lubrication port, allow easy re-lubrication of the Linear Unit and allow the possibility to attach additional accessories on the side.
For the Linear Units MTJ and MRJ various adaptation options, for attaching (or redirecting), for Motors or Gearboxes are available.

MTJ **MRJ**

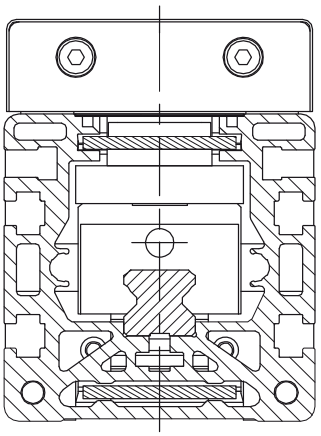

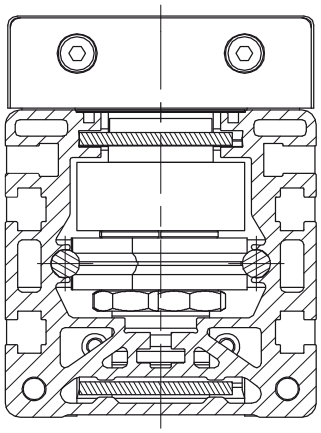



The aluminium profiles are manufactured according to the medium EN 12020-2 standard

Straightness = 0,35 mm/m; Max. torsion = 0,35 mm/m; Angular torsion = 0,2 mm/40 mm; Parallelism = 0,2 mm

In order to improve the products in this catalogue the specifications are subject to change without notice.

STRUCTURAL DESIGN

MTJ Series

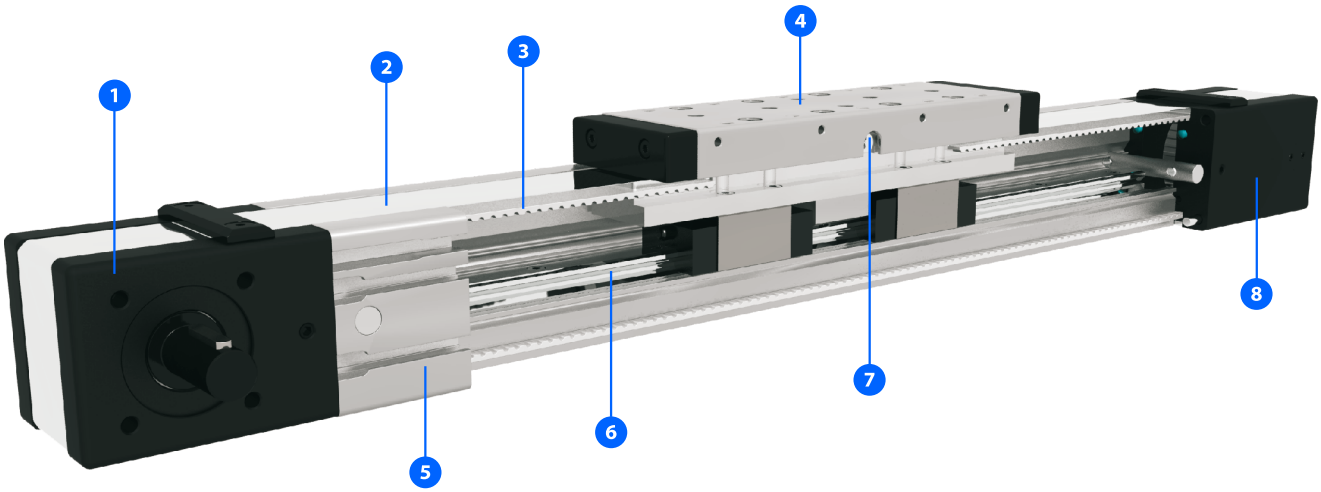

1 - Drive block with pulley
2 - Corrosion-resistant protection strip (available also without protection strip)
3 - AT polyurethane toothed belt with steel tension cords
4 - Carriage; with built in Magnets
5 - Aluminium profile-Hard anodized
6 - Linear Ball Guideway
7 - Central lubrication port; both sides
8 - Tension End with integrated belt tensioning system

MRJ Series

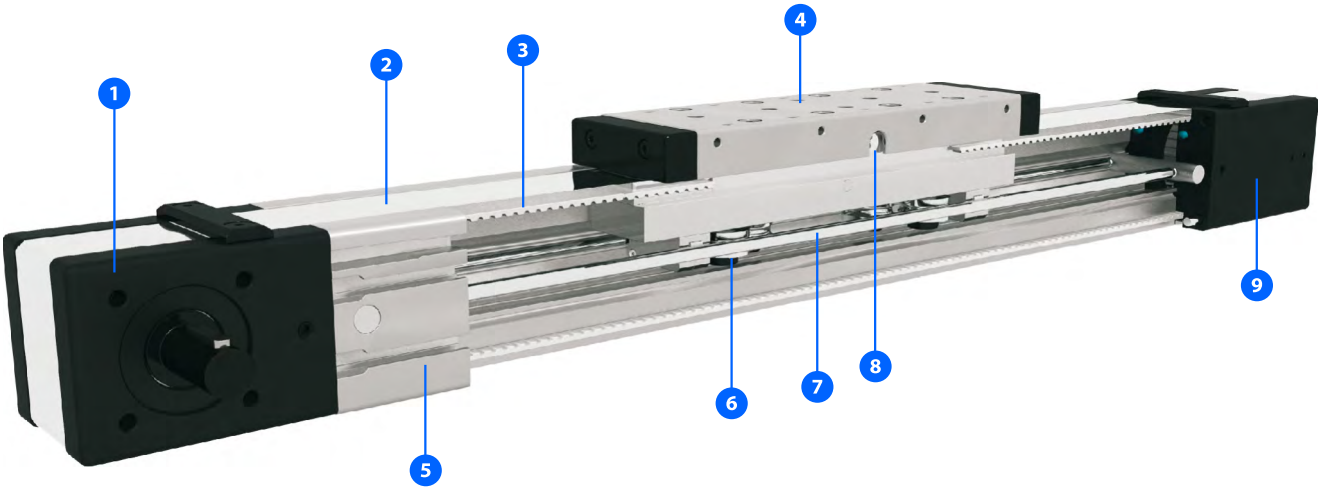

1 - Drive block with pulley
2 - Corrosion-resistant protection strip (available also without protection strip)
3 - AT polyurethane toothed belt with steel tension cords
4 - Carriage; with build in Magnets
5 - Aluminium profile-Hard anodized
6 - Track Roller (journal Bearing)
7 - Two hardened steel Round guide (58/60 HRC)
8 - Central lubrication port; both sides
9 - Tension End with integrated belt tensioning system

HOW TO ORDER



Series :

MRJ

MTJ

Size :

40

65

80

110

Absolute stroke [mm] :
(Absolute stroke = Effective stroke + 2 x Safety stroke)

Carriage Version :

S : Short (only for MTJ series)

L : Long

Leave blank : For MRJ 40, MTJ 40

Number of carriages :

The stated number specifies the number of carriages on one Linear unit (up to 5 carriages avaliable)

Leave blank : For the case of one carriage

Distance between two carriages [mm] :

Leave blank : For the case of one carriage

Type of drive pulley :

0 : Pulley with through hole

1 : Pulley with journal (with Keyway)

10 : Pulley with journal (without Keyway)

2 : Pulley with journal on both sides (with Keyway)

20 : Pulley with journal on both sides (without Keyway)

3 : Without drive unit

Drive journal position :

L : Journal on left side

R : Journal on right side

Leave blank : For type of drive pulley 0, 2, 20 and 3

Protection cover :

0 : In profile groove guided Polyurethane toothed belt

1 : Corrosion-resistant protection strip

In order to improve the products in this catalogue the specifications are subject to change without notice.

TECHNICAL DATA

General technical data

Linear Unit	Carriage length	Dynamic load capacity			Dynamic moment			Max. permissible loads					Moved mass	Max. Repeatability	* Max. length	* Max. stroke	** Min. stroke
								Forces		Moments							
	Lv [mm]	C [N]	Cy [N]	Cz [N]	Mx [Nm]	My [Nm]	Mz [Nm]	Fpy [N]	Fpz [N]	Mpx [Nm]	Mpy [Nm]	Mpz [Nm]	[kg]	[mm]	Lmax [mm]	[mm]	[mm]
MTJ 40	92	4610	/	/	28	90	90	3850	3850	14	75	75	0,28	± 0,08	3000	2876	25
MRJ 40	92	/	3400	1700	20	21	25	1015	1090	13	14	7,6	0,26	± 0,08	6000	5876	0

*For lengths / stroke over the stated value in the table above please contact us.
Values for max. stroke are not valid for multiple carriages
(equation of defining the linear unit length for particular size of the linear unit needs to be used).

**For minimum stroke below the stated value in the table above please contact us.

Operating conditions	
Operating temp.	0°C ~ +60°C
Duty cycle	100%

For operating temperature out of the presented range, please contact us.

Recommended values of loads

All the data of dynamic moments and load capacities stated in the upper table are theoretical without considering any safety factor. The safety factor depends on the application and its requested safety. We recommend a minimum safety factor (fs =5.0)

Modulus of elasticity :

$E = 70000 \text{ N / mm}^2$

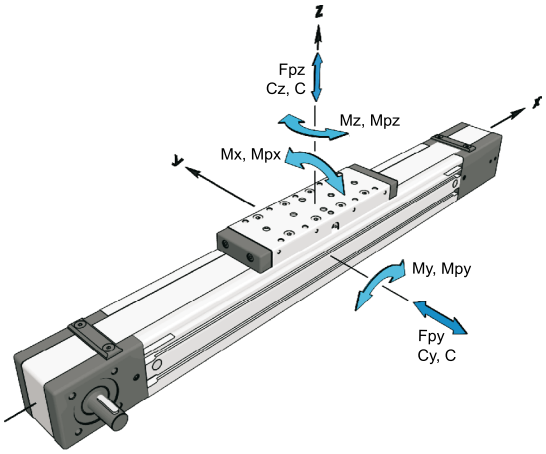

General technical data for double carriage

Linear Unit	Carriage version	Dynamic load capacity			* Dynamic moment			* Max. permissible loads				
								Forces		Moments		
		C [N]	Cy [N]	Cz [N]	Mx [Nm]	My [Nm]	Mz [Nm]	Fpy [N]	Fpz [N]	Mpx [Nm]	Mpy [Nm]	Mpz [Nm]
MTJ 40	2	9220	/	/	57	4,6 × A	4,6 × A	7690	7690	28	3,8 × A	3,8 × A
MRJ 40	2	/	6800	3400	40	1,7 × A	3,4 × A	2030	2180	26	1,1 × A	1,0 × A

A - Distance between carriages [mm]. More info on following pages.

Presented values are for informational purposes only. Exact values can be calculated using our sizing selection tool on Unimotion web site.

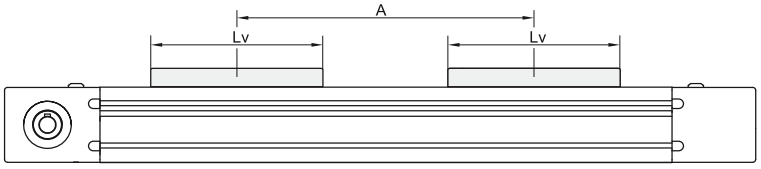

Drive and belt data

Linear Unit	* Max. travel speed	Max. drive torque	** No load torque		Puley drive ratio	Pulley diameter	Belt type	Belt width	Max. force transmited by belt	Specific spring constant	* Max. acceleration
		Ma	With strip	Without strip						Cspec	
	[m / s]	[Nm]	[Nm]	[Nm]	[mm / rev]	[mm]		[mm]	[N]	[N]	[m/s^2]
MTJ 40	6	3,7	0,4 × nc	0,2 × nc	99	31,51	AT 3	20	235	225000	70
MRJ 40	10		0,4 × nc	0,2 × nc							

*Max. travel speed and max. acceleration of Linear unit with the Corrosion-resistant protection strip is 1,5 m/s and 50 m/s^2 respectively.
For travel speed and acceleration over the stated value in the table above please contact us.

**The stated values are for strokes (and for distances between the carriages A) up to 500mm. No Load Torque value increases with stroke (and with A) elongation.*

TECHNICAL DATA

Mass and mass moment of inertia

Linear Unit	* Mass of linear unit [kg]	* Mass moment of inertia [10^{-5} kg m^2]	Planar moment of inertia Iy [cm^4]	Iz [cm^4]
MTJ 40	1,3 + 0,0024 × (Abs. stroke + (nc - 1) × A) + 0,28 × (nc - 1)	9,7 + 0,0035 × (Abs. stroke + (nc - 1) × A) + 7,0 × (nc - 1)	9,8	11,6
MRJ 40	1,25 + 0,0022 × (Abs. stroke + (nc - 1) × A) + 0,26 × (nc - 1)	9,3 + 0,0035 × (Abs. stroke + (nc - 1) × A) + 6,5 × (nc - 1)		

*Absolute stroke [mm]
A - Distance between carriages [mm]. More info on following pages.
nc - Number of carriages

Mass calculation doesn´t include mass of motor, reduction gear, switches and clamps.

Deflection of the linear unit

Fixed - fixed mounting

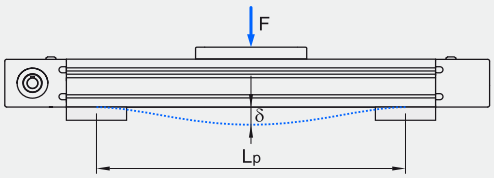

Fixed - free mounting

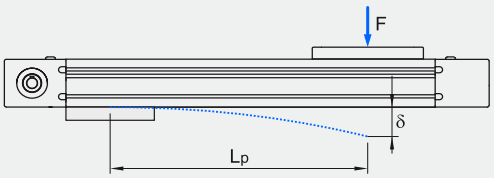

δ Maximum deflection of the linear unit [mm]
δmax Maximum permissible deflection of the linear unit [mm]
F Applied force [N]
Lp Unsupported profile length [mm]

The maximum permissible deflection δmax must not be exceeded. In the case that maximum deflection δ exceeds the maximum permissible deflection δmax additional profile supports are needed.

MTJ 40

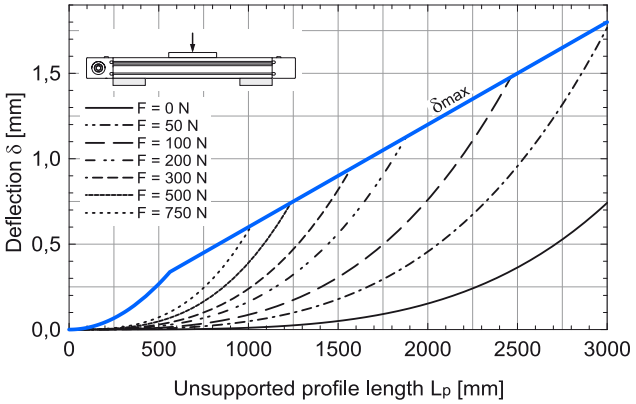

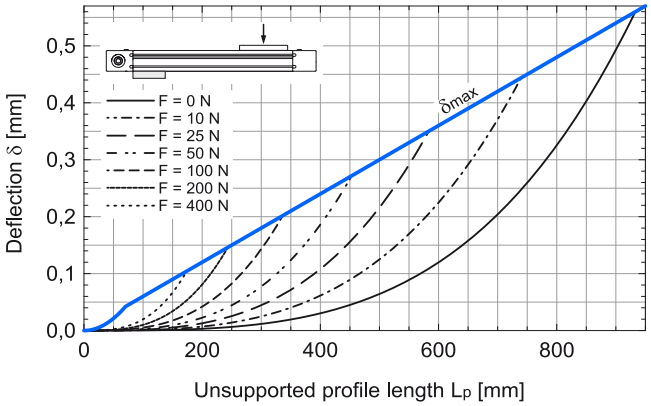

MRJ 40

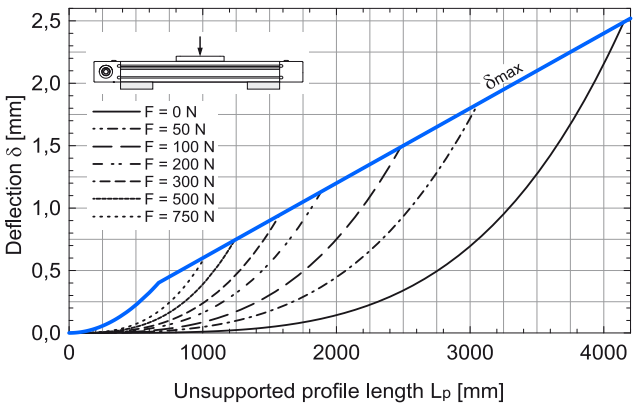

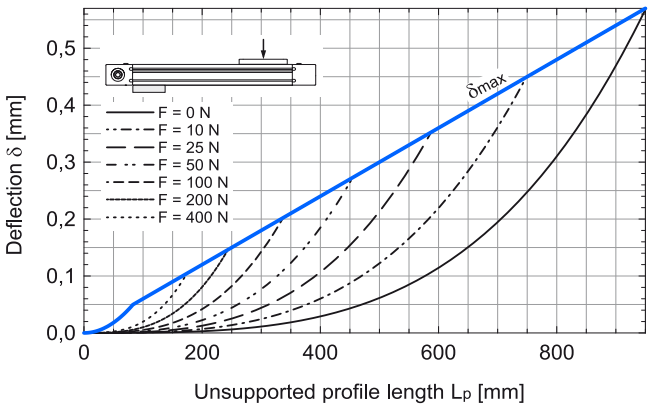

In order to improve the products in this catalogue the specifications are subject to change without notice.

DIMENSIONS

Linear Unit doesn't include any safety stroke.
Absolute stroke = Effective stroke + 2 x Safety stroke

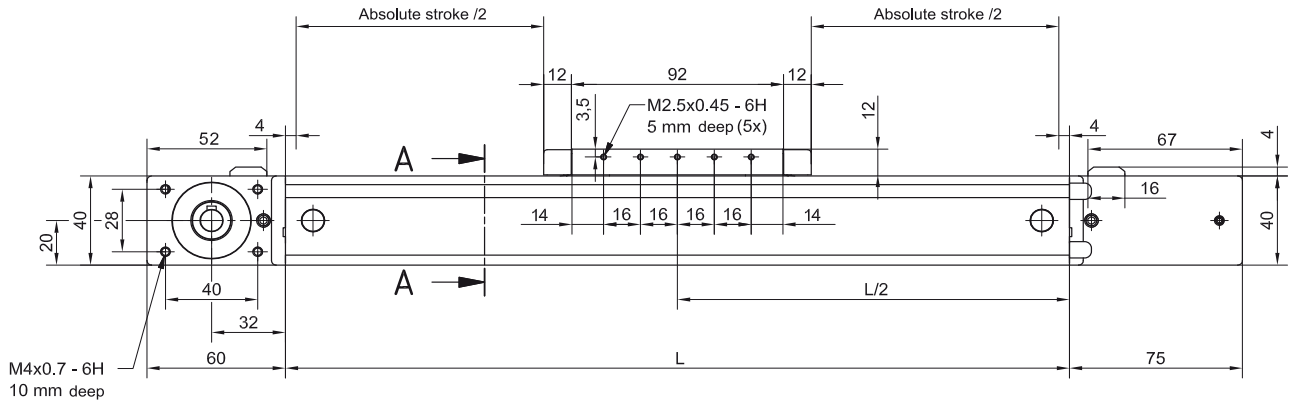

Lifetime lubricated!

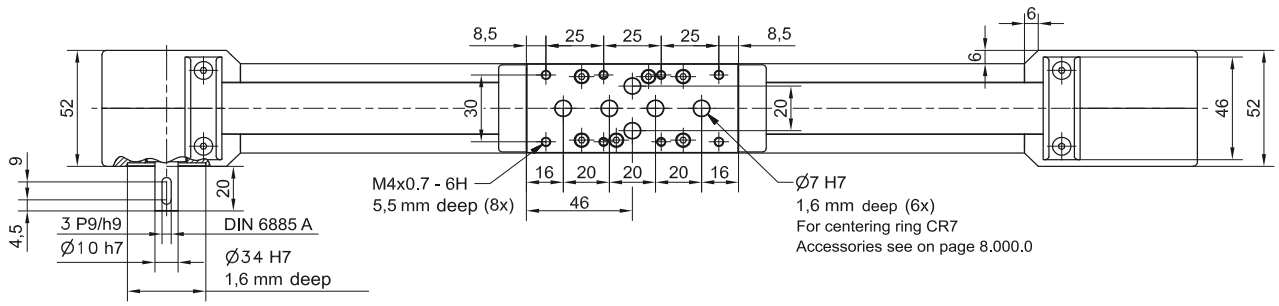

Journal with or without Keyway.

All dimensions in mm; Drawings scales are not equal.

TYPE 0

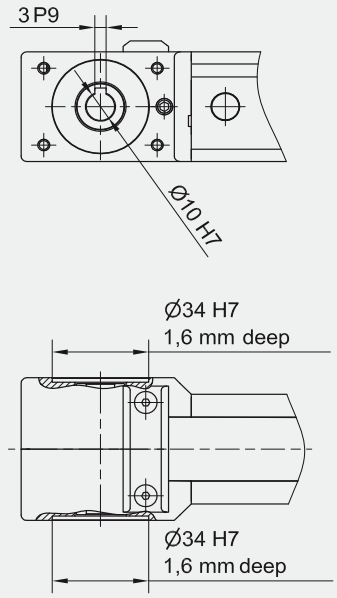

TYPE 1 L and 1 R

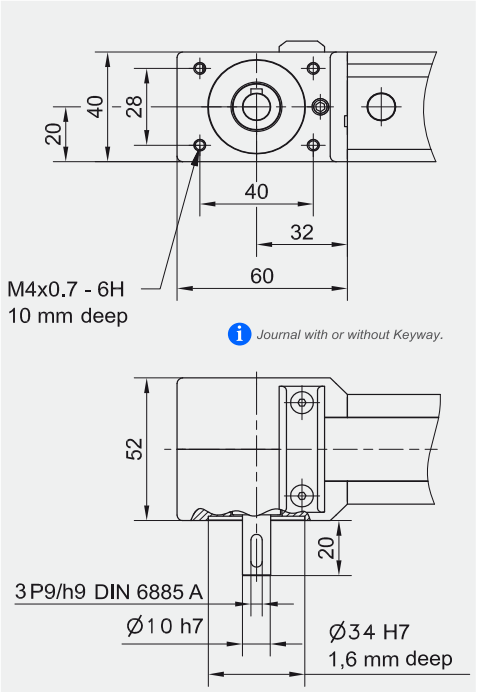

TYPE 2

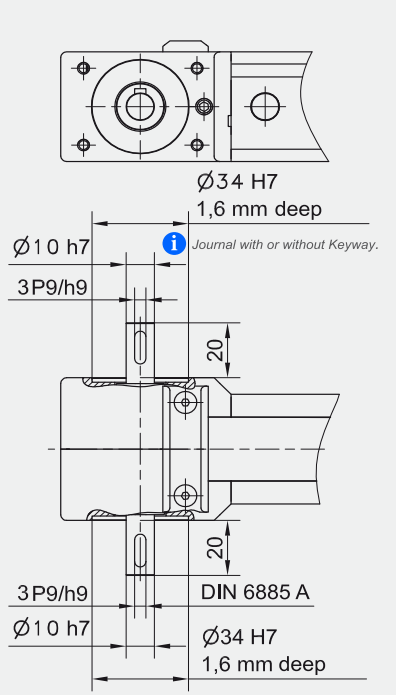

DIMENSIONS

MTJ 40

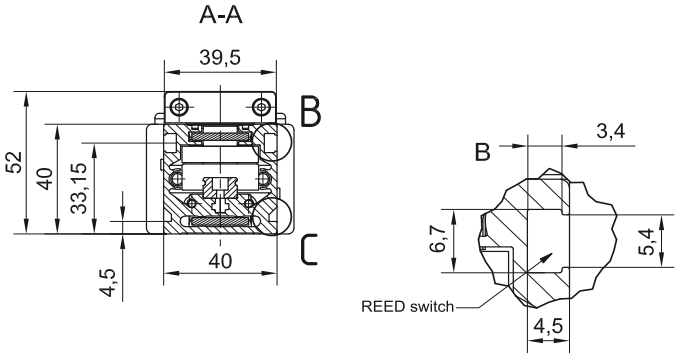

OPTIONAL:

TAP / PIN holes available on request.

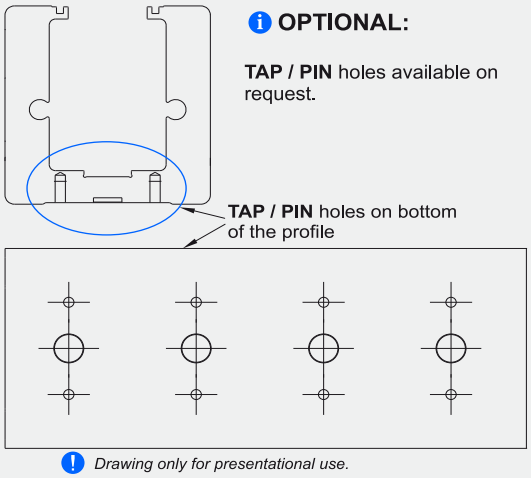

Drawing only for presentational use.

MRJ 40

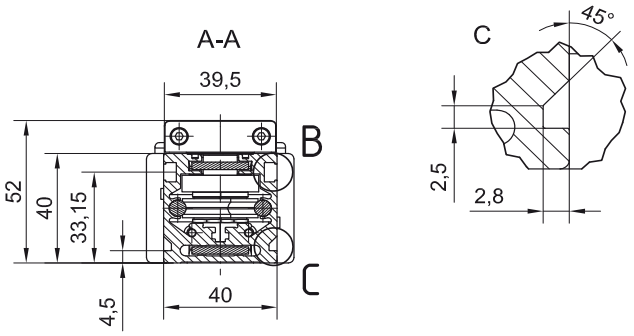



All dimensions in mm; Drawings scales are not equal.

Mounting the drive

- by the **MOTOR ADAPTER WITH COUPLING** *(Page 8.020.0)*

Available on request.

Defining of the linear unit length

L = Effective stroke + 2 × Safety stroke + Lv + 32 mm

Lv = 92 mm

Ltotal = L + 135 mm

Left side (L)

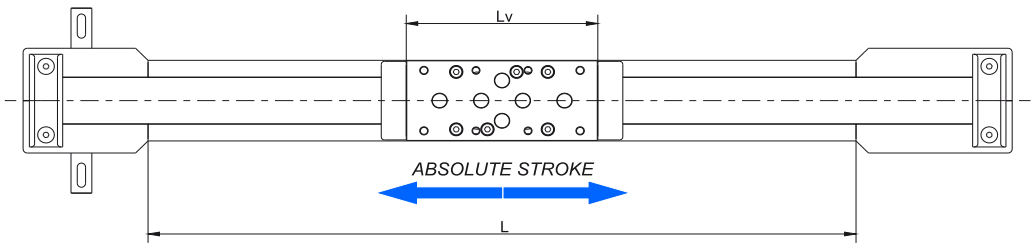

Right side (R)

Multiple carriages

Carriages are connected inside the profile with an aluminium plate (or a toothed belt for the case of longer distances A)

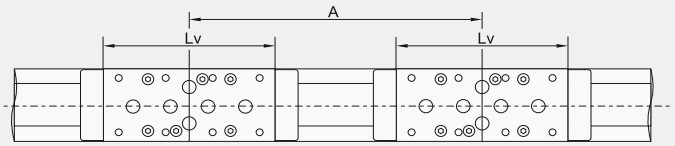

L = Effective stroke + 2 × Safety stroke + Lv + A × (nc - 1) + 32 mm

Ltotal = L + 135 mm

A ≥ Lv + 24 mm

nc - Number of carriages

For the case of A [mm] > Alim :

- a toothed belt for the connection of the carriages will be used,
- the following condition must be met:
A [mm] = Alim + 3 × i,
where i ∈ {1,2,3,...}.

	MTJ / MRJ 40
Alim [mm]	401,5

In order to improve the products in this catalogue the specifications are subject to change without notice.

TECHNICAL DATA

General technical data

Linear Unit	Carriage length	Dynamic load capacity			Dynamic moment			Max. permissible loads					Moved mass	Max. Repeatability	* Max. length	* Max. stroke	** Min. stroke
								Forces		Moments							
	Lv [mm]	C [N]	Cy [N]	Cz [N]	Mx [Nm]	My [Nm]	Mz [Nm]	Fpy [N]	Fpz [N]	Mpx [Nm]	Mpy [Nm]	Mpz [Nm]	[kg]	[mm]	Lmax [mm]	[mm]	[mm]
MTJ 65 S	140	9900	/	/	79	59	59	3270	5100	34	34	34	1,00	± 0,08		5820	40
MTJ 65 L	190	19800	/	/	158	1025	1025	6540	10190	60	530	340	1,45	± 0,08	6000	5770	40
MRJ 65 L	190	/	8600	4400	74	186	425	1920	1470	25	62	95	1,31	± 0,08		5770	0

*For lengths / stroke over the stated value in the table above please contact us.
Values for max. stroke are not valid for multiple carriages
(equation of defining the linear unit length for particular size of the linear unit needs to be used).

**For minimum stroke below the stated value in the table above please contact us.

Operating conditions	
Operating temp.	0°C ~ +60°C
Duty cycle	100%

For operating temperature out of the presented range, please contact us.

Recommended values of loads

All the data of dynamic moments and load capacities stated in the upper table are theoretical without considering any safety factor. The safety factor depends on the application and its requested safety. We recommend a minimum safety factor (fs =5.0)

Modulus of elasticity :

$E = 70000 \text{ N / mm}^2$

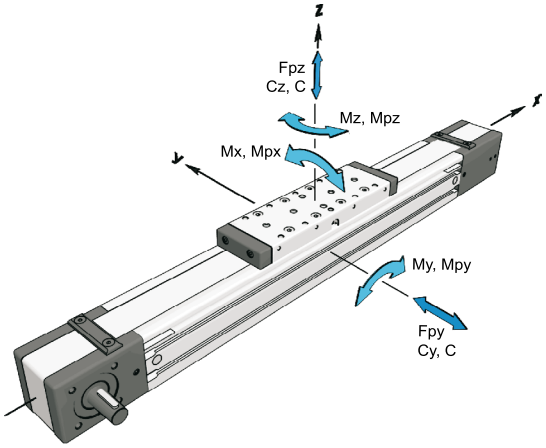

General technical data for double carriage

Linear Unit	Carriage version	Dynamic load capacity			* Dynamic moment			* Max. permissible loads				
								Forces		Moments		
		C [N]	Cy [N]	Cz [N]	Mx [Nm]	My [Nm]	Mz [Nm]	Fpy [N]	Fpz [N]	Mpx [Nm]	Mpy [Nm]	Mpz [Nm]
MTJ 65	S2	19800	/	/	158	9,9 × A	9,9 × A	6540	10190	68	5,1 × A	3,3 × A
MTJ 65	L2	39600	/	/	316	19,8 × A	19,8 × A	13080	20380	120	10,2 × A	6,5 × A
MRJ 65	L2	/	17200	8800	148	4,4 × A	8,6 × A	3850	2940	50	1,5 × A	1,9 × A

*A - Distance between carriages [mm]. More info on following pages.

Presented values are for informational purposes only. Exact values can be calculated using our sizing selection tool on Unimotion web site.

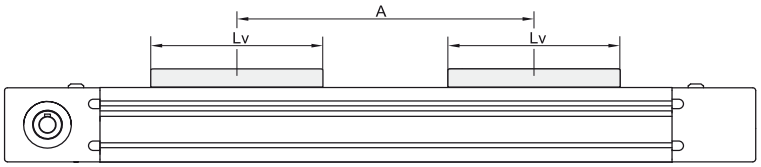

Drive and belt data

Linear Unit	* Max. travel speed	Max. drive torque	** No load torque		Puley drive ratio	Pulley diameter	Belt type	Belt width	Max. force transmited by belt	Specific spring constant	* Max. acceleration
		Ma	With strip	Without strip						Cspec	
	[m / s]	[Nm]	[Nm]	[Nm]	[mm / rev]	[mm]		[mm]	[N]	[N]	[m/s²]
MTJ 65 S	6	13,1	1,1 × nc	0,8 × nc	165	52,52	AT 5	32	500	600000	70
MTJ 65 L			1,2 × nc	0,9 × nc							
MRJ 65 L	10		1,0 × nc	0,7 × nc							

*Max. travel speed and max. acceleration of Linear unit with the Corrosion-resistant protection strip is 1,5 m/s and 50 m/s², respectively.
For travel speed and acceleration over the stated value in the table above please contact us.

**The stated values are for strokes (and for distances between the carriages A) up to 500mm. No Load Torque value increases with stroke (and with A) elongation.
nc - Number of carriages

TECHNICAL DATA

Mass and mass moment of inertia

Linear Unit	* Mass of linear unit [kg]	* Mass moment of inertia [10^{-5} kg m^2]	Planar moment of inertia Iy [cm^4]	Iz [cm^4]
MTJ 65 S	4,0 + 0,0055 × (Abs. stroke + (nc - 1) × A) + 1,00 × (nc - 1)	98,4 + 0,0154 × (Abs. stroke + (nc - 1) × A) + 69,0 × (nc - 1)	59,7	74,4
MTJ 65 L	4,6 + 0,0055 × (Abs. stroke + (nc - 1) × A) + 1,45 × (nc - 1)	130,1 + 0,0154 × (Abs. stroke + (nc - 1) × A) + 100,0 × (nc - 1)		
MRJ 65 L	4,3 + 0,0047 × (Abs. stroke + (nc - 1) × A) + 1,31 × (nc - 1)	120,4 + 0,0154 × (Abs. stroke + (nc - 1) × A) + 90,3 × (nc - 1)		

*Absolute stroke [mm]
A - Distance between carriages [mm]. More info on following pages.
nc - Number of carriages

Mass calculation doesn´t include mass of motor, reduction gear, switches and clamps.

Deflection of the linear unit

Fixed - fixed mounting

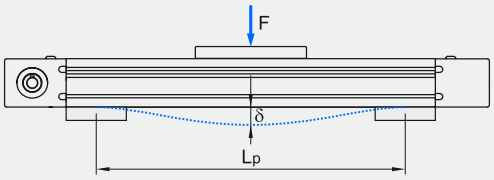

Fixed - free mounting

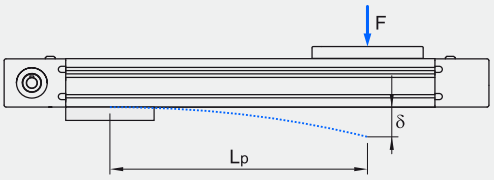

δ Maximum deflection of the linear unit [mm]
δmax Maximum permissible deflection of the linear unit [mm]
F Applied force [N]
Lp Unsupported profile length [mm]

The maximum permissible deflection δmax must not be exceeded. In the case that maximum deflection δ exceeds the maximum permissible deflection δmax additional profile supports are needed.

MTJ 65

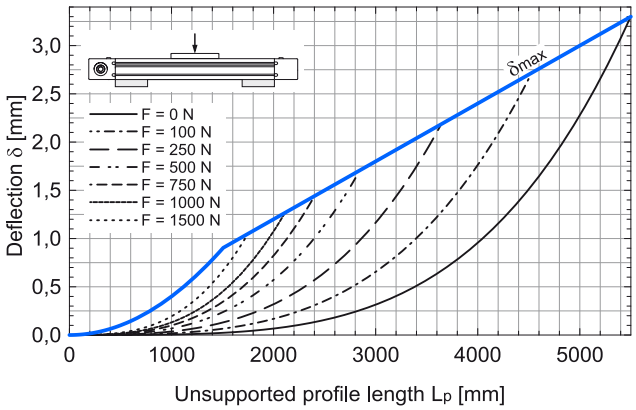

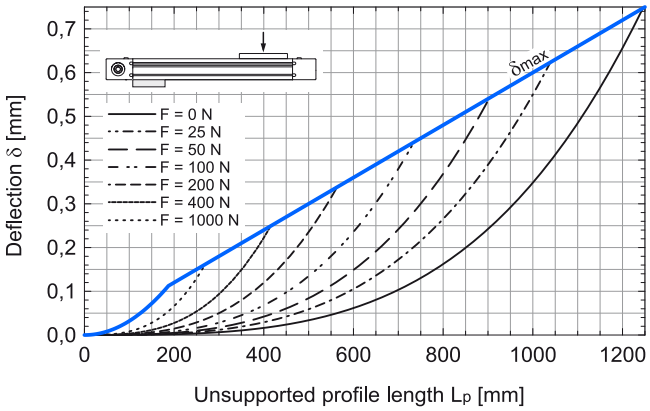

MRJ 65

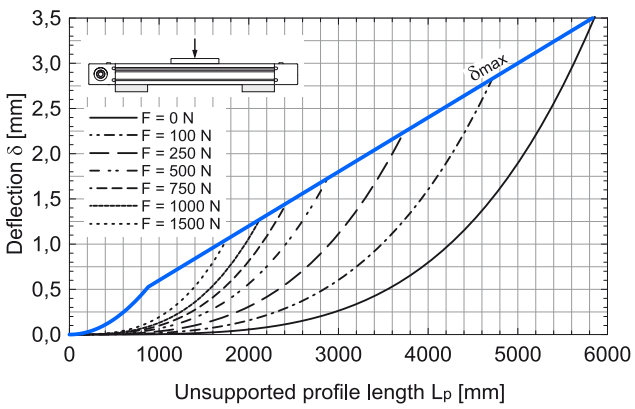

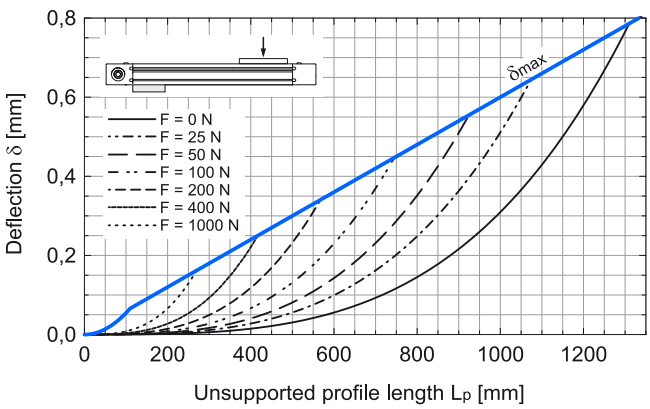

In order to improve the products in this catalogue the specifications are subject to change without notice.

DIMENSIONS

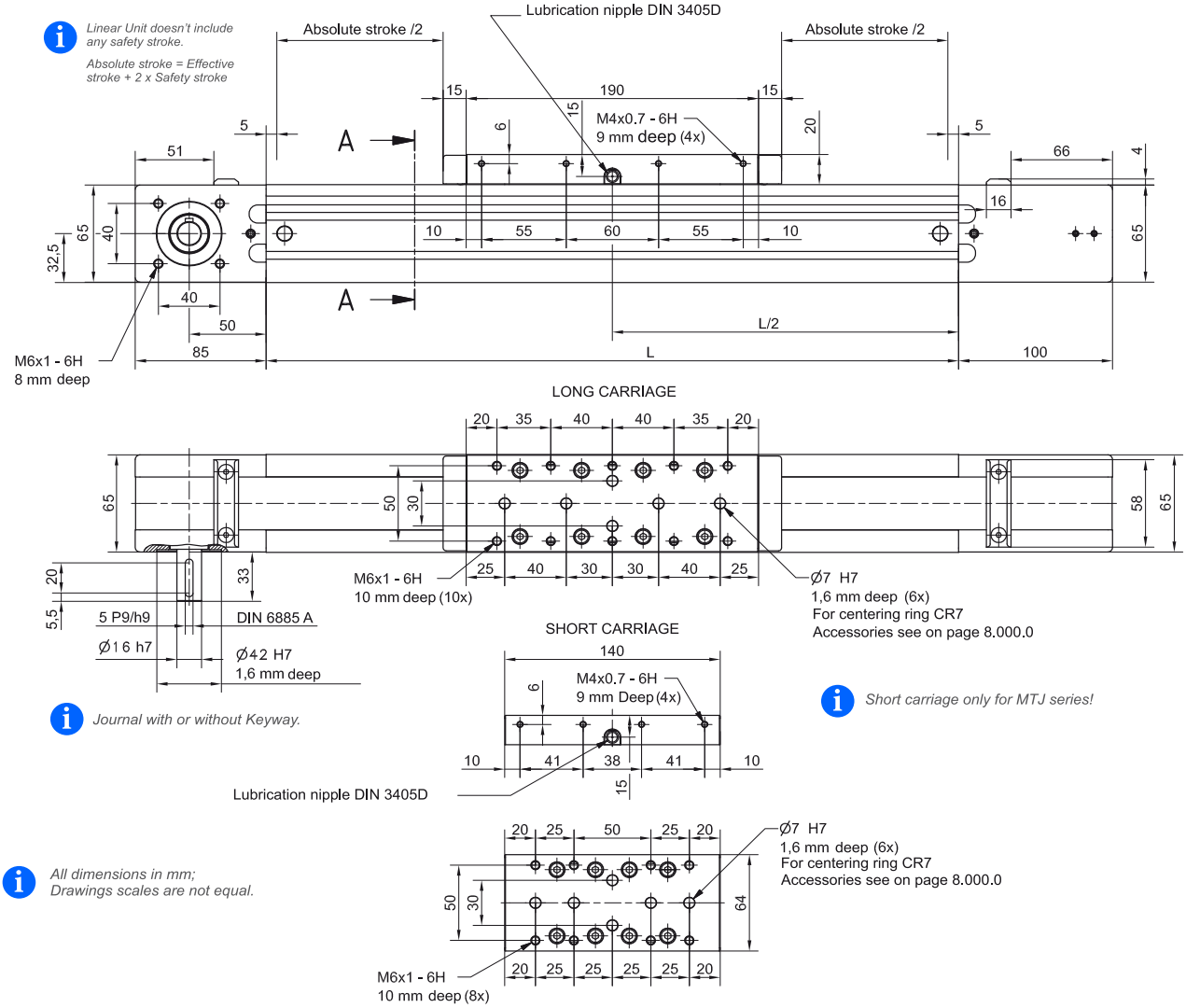

TYPE 0

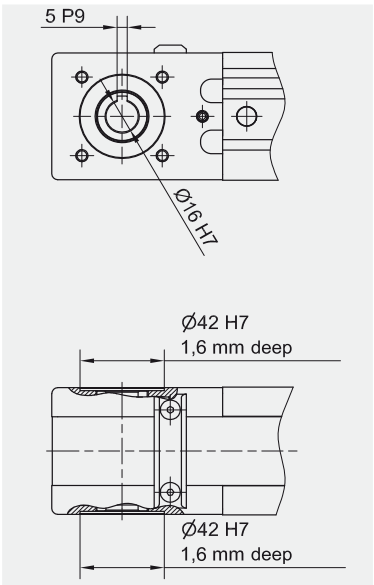

TYPE 1 L and 1 R

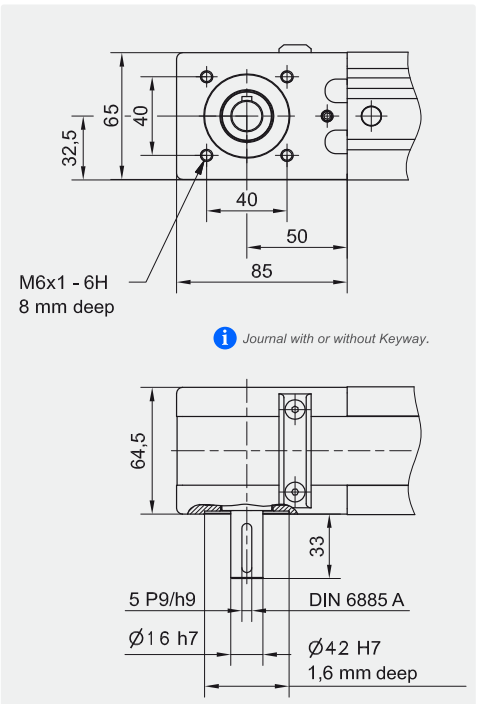

TYPE 2

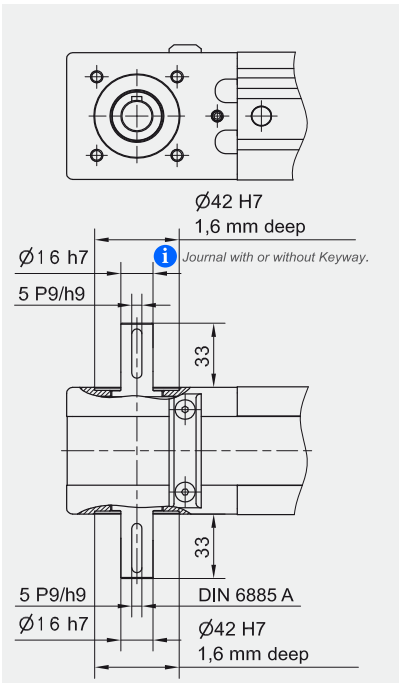

DIMENSIONS

MTJ 65

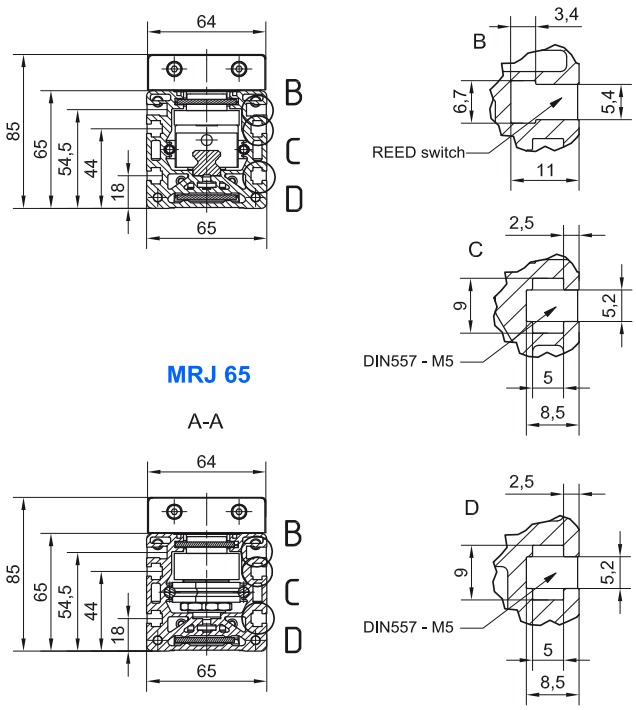

MRJ 65

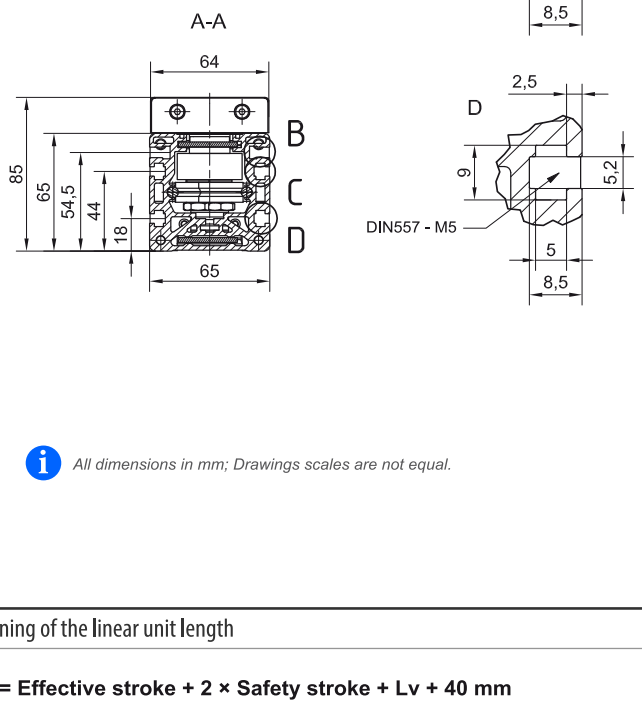

OPTIONAL:

TAP / PIN holes available on request.

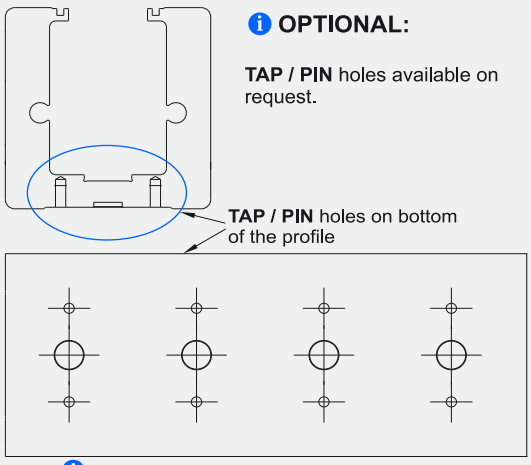

Drawing only for presentational use.



All dimensions in mm; Drawings scales are not equal.

Mounting the drive

- by the **MOTOR ADAPTER WITH COUPLING** *(Page 8.020.0)*

Available on request.

Defining of the linear unit length

L = Effective stroke + 2 × Safety stroke + Lv + 40 mm

Ltotal = L + 185 mm

Lv - Long carriage = 190 mm

Lv - Short carriage = 140 mm

Left side (L)

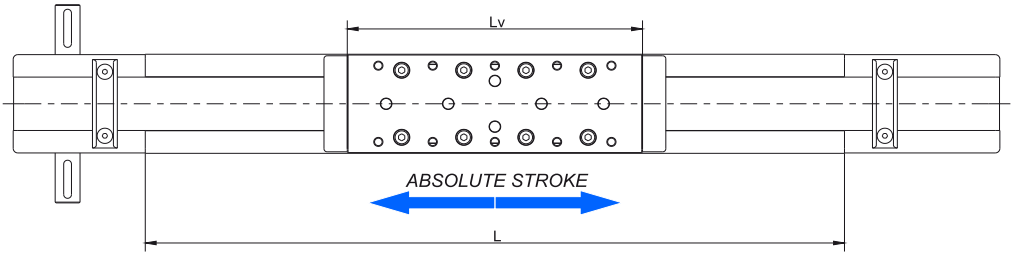

Right side (R)

Multiple carriages

Carriages are connected inside the profile with an aluminium plate (or a toothed belt for the case of longer distances A)

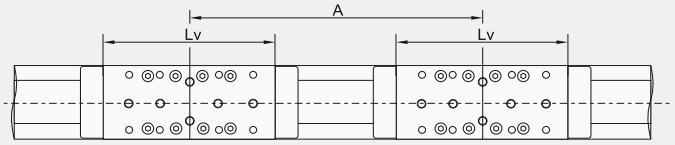

L = Effective stroke + 2 × Safety stroke + Lv + A × (nc - 1) + 40 mm

Ltotal = L + 185 mm

A ≥ Lv + 30 mm

For the case of A [mm] > Alim :

- a toothed belt for the connection of the carriages will be used,
- the following condition must be met:

A [mm] = Alim + 5 × i,

where i ∈ {1,2,3,...}.

	MTJ 65 S	MTJ / MRJ 65 L
Alim [mm]	550	600

In order to improve the products in this catalogue the specifications are subject to change without notice.

TECHNICAL DATA

General technical data

Linear Unit	Carriage length	Dynamic load capacity			Dynamic moment			Max. permissible loads					Moved mass	Max. Repeatability	* Max. length	* Max. stroke	** Min. stroke
								Forces		Moments							
	Lv [mm]	C [N]	Cy [N]	Cz [N]	Mx [Nm]	My [Nm]	Mz [Nm]	Fpy [N]	Fpz [N]	Mpx [Nm]	Mpy [Nm]	Mpz [Nm]	[kg]	[mm]	Lmax [mm]	[mm]	[mm]
MTJ 80 S	170	17100	/	/	185	130	130	4470	7530	110	122	100	1,72	± 0,08	6000	5788	55
MTJ 80 L	260	34200	/	/	370	2565	2565	8930	15060	150	1130	670	2,72	± 0,08		5698	55
MRJ 80 L	260	/	17100	9000	198	511	1145	3400	1760	39	101	228	2,73	± 0,08		5698	0

*For lengths / stroke over the stated value in the table above please contact us.
Values for max. stroke are not valid for multiple carriages
(equation of defining the linear unit length for particular size of the linear unit needs to be used).

**For minimum stroke below the stated value in the table above please contact us.

Operating conditions	
Operating temp.	0°C ~ +60°C
Duty cycle	100%

For operating temperature out of the presented range, please contact us.

Recommended values of loads

All the data of dynamic moments and load capacities stated in the upper table are theoretical without considering any safety factor. The safety factor depends on the application and its requested safety. We recommend a minimum safety factor (fs =5.0)

Modulus of elasticity :

E = 70000 N / mm^2

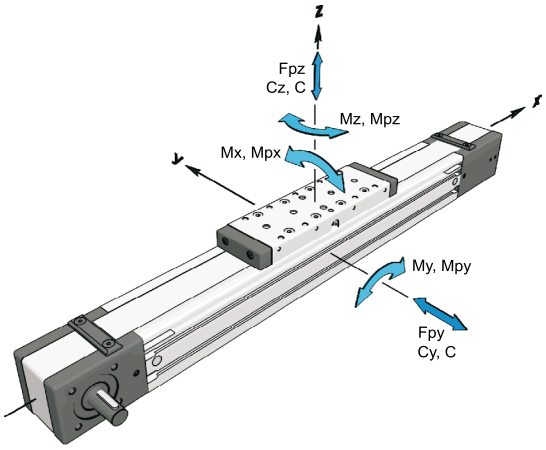

General technical data for double carriage

Linear Unit	Carriage version	Dynamic load capacity			* Dynamic moment			* Max. permissible loads				
								Forces		Moments		
		C [N]	Cy [N]	Cz [N]	Mx [Nm]	My [Nm]	Mz [Nm]	Fpy [N]	Fpz [N]	Mpx [Nm]	Mpy [Nm]	Mpz [Nm]
MTJ 80	S2	34200	/	/	370	17,1 × A	17,1 × A	8930	15060	220	7,5 × A	4,5 × A
MTJ 80	L2	68400	/	/	740	34,2 × A	34,2 × A	17860	30130	300	15,1 × A	8,9 × A
MRJ 80	L2	/	34200	18000	396	9,0 × A	17,1 × A	6800	3530	78	1,8 × A	3,4 × A

A - Distance between carriages [mm]. More info on following pages.

Presented values are for informational purposes only. Exact values can be calculated using our sizing selection tool on Unimotion web site.

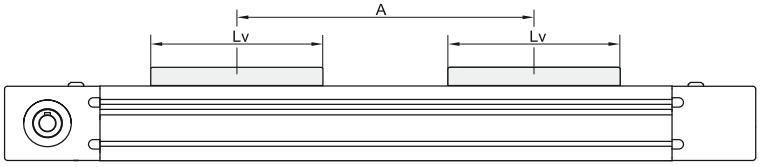

Drive and belt data

Linear Unit	* Max. travel speed	Max. drive torque	** No load torque		Puley drive ratio	Pulley diameter	Belt type	Belt width	Max. force transmited by belt	Specific spring constant	* Max. acceleration
		Ma	With strip	Without strip						Cspec	
	[m / s]	[Nm]	[Nm]	[Nm]	[mm / rev]	[mm]		[mm]	[N]	[N]	[m/s^2]
MTJ 80 S	6	29,4	1,5 × nc	1,2 × nc	210	66,84	AT 5	50	880	960000	70
MTJ 80 L			1,7 × nc	1,4 × nc							
MRJ 80 L	10		1,4 × nc	1,1 × nc							

*Max. travel speed and max. acceleration of Linear unit with the Corrosion-resistant protection strip is 1,5 m/s and 50 m/s^2 respectively.
For travel speed and acceleration over the stated value in the table above please contact us.

**The stated values are for strokes (and for distances between the carriages A) up to 500mm. No Load Torque value increases with stroke (and with A) elongation.
nc - Number of carriages

TECHNICAL DATA

Mass and mass moment of inertia

Linear Unit	* Mass of linear unit [kg]	* Mass moment of inertia [10^{-5} kg m^2]	Planar moment of inertia Iy [cm^4]	Iz [cm^4]
MTJ 80 S	6,8 + 0,0085 × (Abs. stroke + (nc - 1) × A) + 1,72 × (nc - 1)	310,6 + 0,0391 × (Abs. stroke + (nc - 1) × A) + 192,1 × (nc - 1)	129,1	173,4
MTJ 80 L	8,4 + 0,0085 × (Abs. stroke + (nc - 1) × A) + 2,72 × (nc - 1)	423,3 + 0,0391 × (Abs. stroke + (nc - 1) × A) + 303,8 × (nc - 1)		
MRJ 80 L	8,2 + 0,0075 × (Abs. stroke + (nc - 1) × A) + 2,73 × (nc - 1)	424,4 + 0,0391 × (Abs. stroke + (nc - 1) × A) + 304,9 × (nc - 1)		

*Absolute stroke [mm]
A - Distance between carriages [mm]. More info on following pages.
nc - Number of carriages

Mass calculation doesn´t include mass of motor, reduction gear, switches and clamps.

Deflection of the linear unit

Fixed - fixed mounting

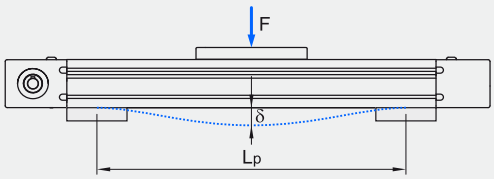

Fixed - free mounting

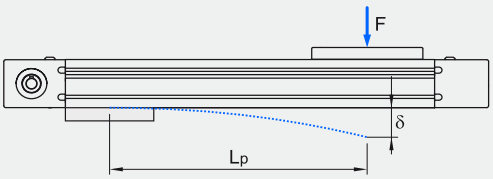

δ Maximum deflection of the linear unit [mm]
δmax Maximum permissible deflection of the linear unit [mm]
F Applied force [N]
Lp Unsupported profile length [mm]

The maximum permissible deflection δmax must not be exceeded. In the case that maximum deflection δ exceeds the maximum permissible deflection δmax additional profile supports are needed.

MTJ 80

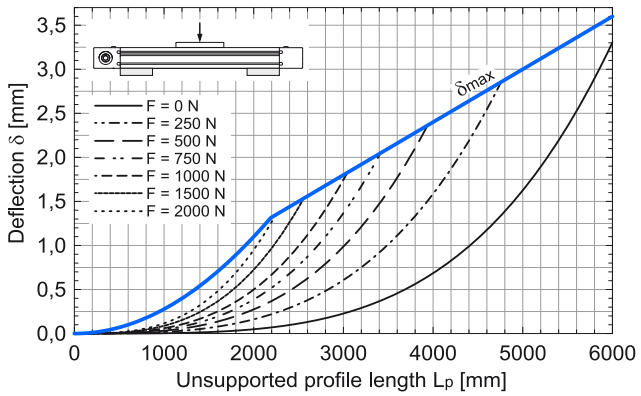

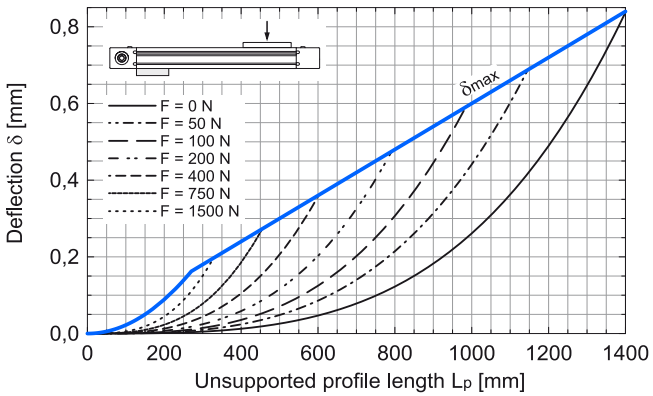

MRJ 80

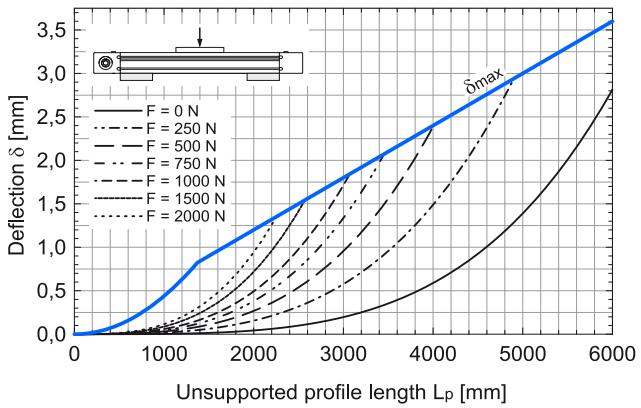

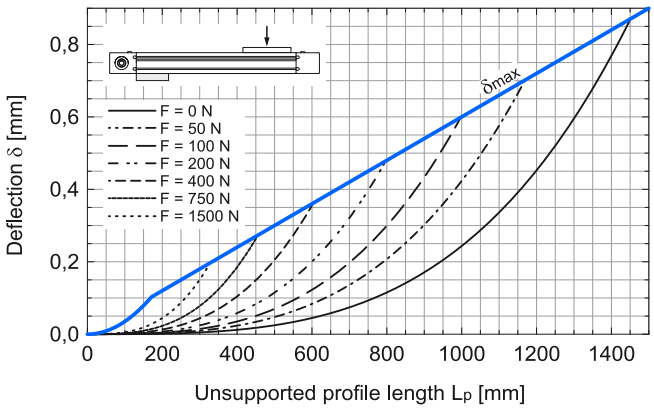

In order to improve the products in this catalogue the specifications are subject to change without notice.

DIMENSIONS

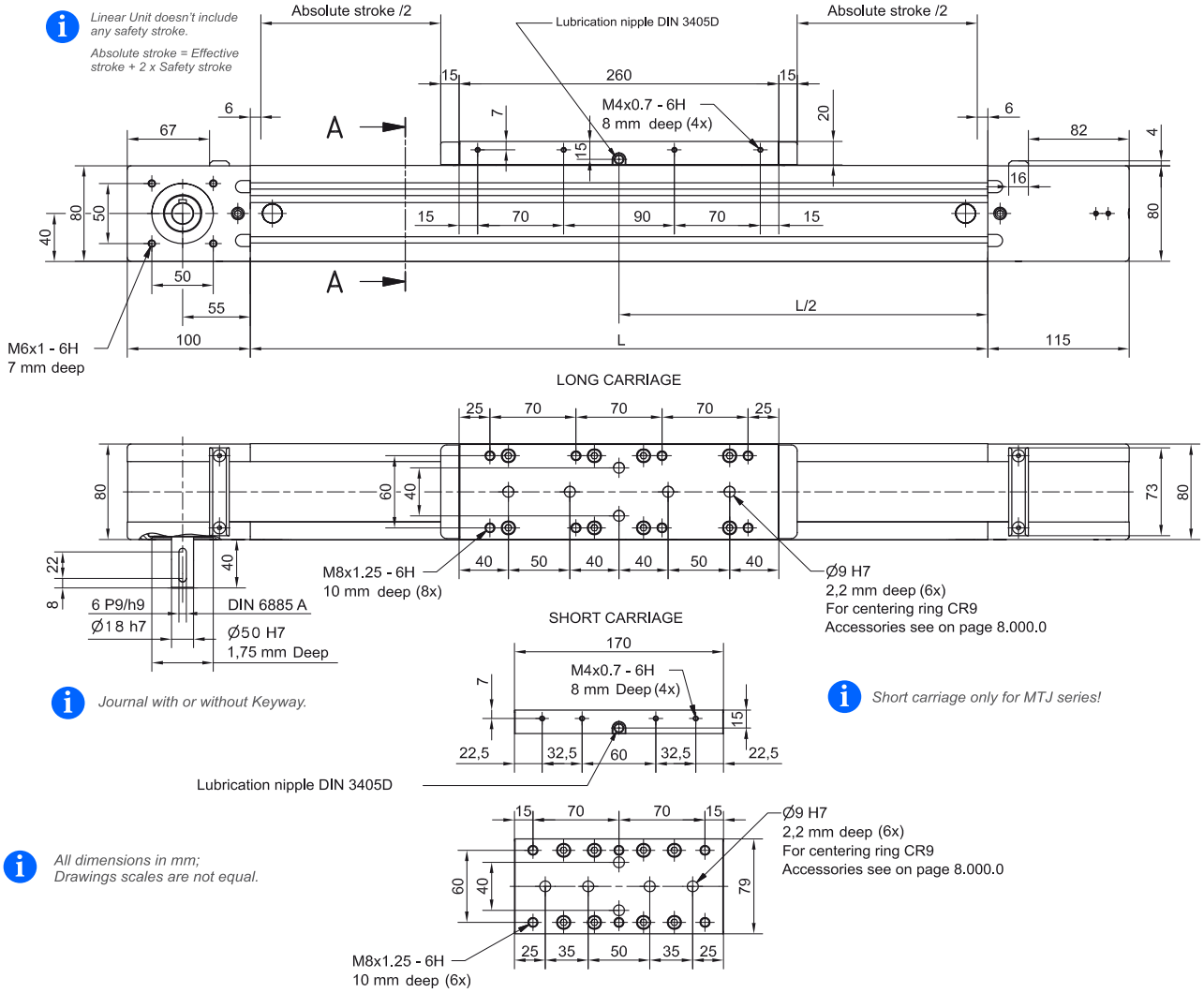

TYPE 0

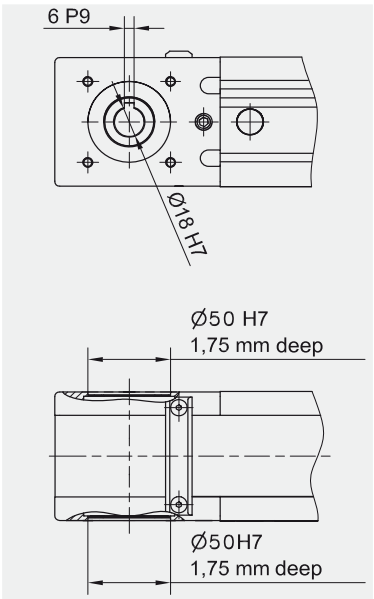

TYPE 1 L and 1 R

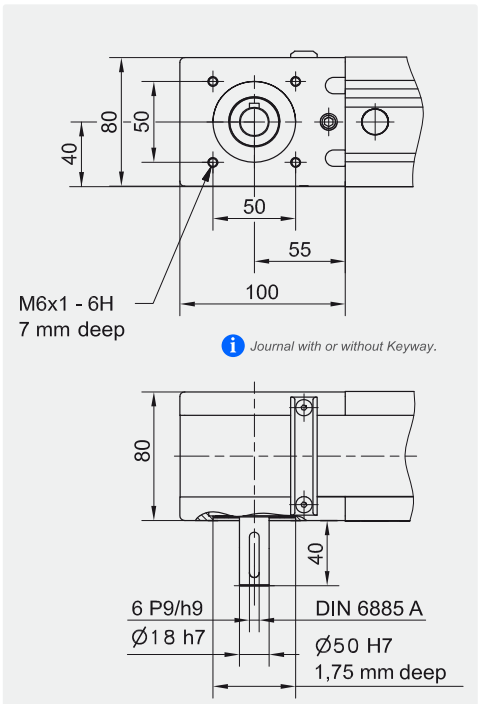

TYPE 2

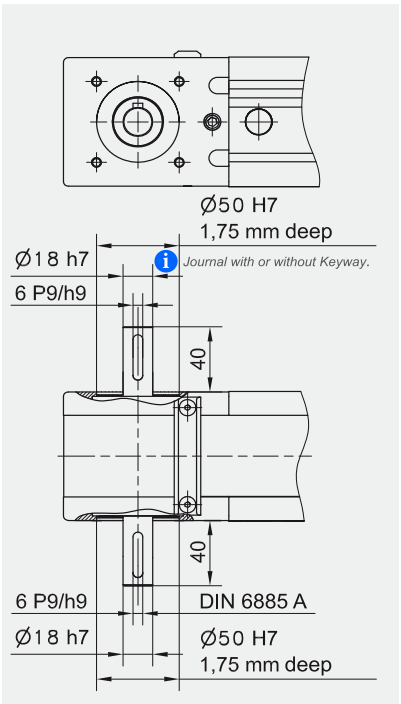

DIMENSIONS

MTJ 80

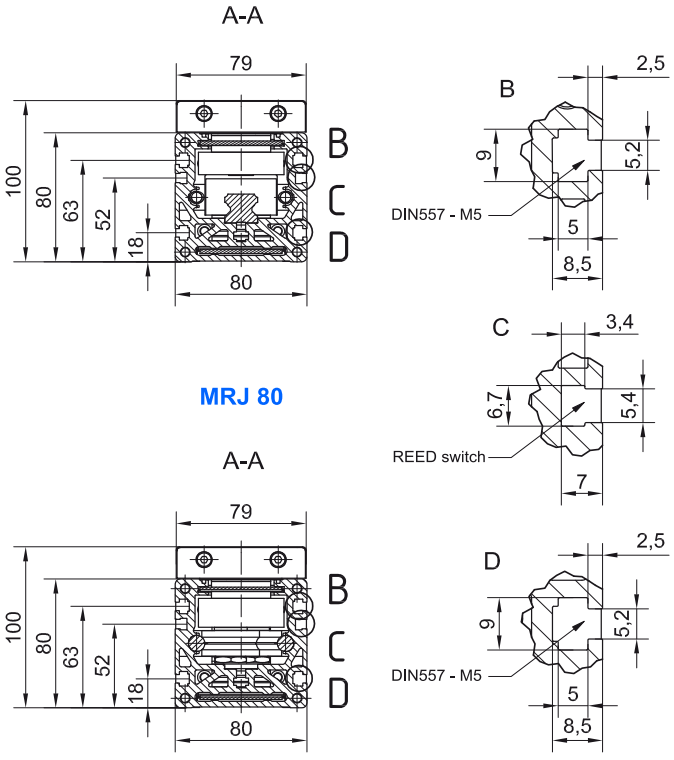

MRJ 80

All dimensions in mm; Drawings scales are not equal.

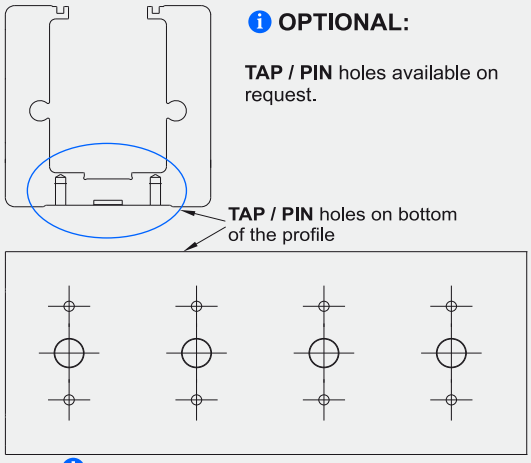

Drawing only for presentational use.



Mounting the drive

- by the **MOTOR ADAPTER WITH COUPLING** *(Page 8.020.0)*

Available on request.

Defining of the linear unit length

L = Effective stroke + 2 × Safety stroke + Lv + 42 mm

Ltotal = L + 215 mm

Lv - Long carriage = 260 mm

Lv - Short carriage = 170 mm

Left side (L)

Right side (R)

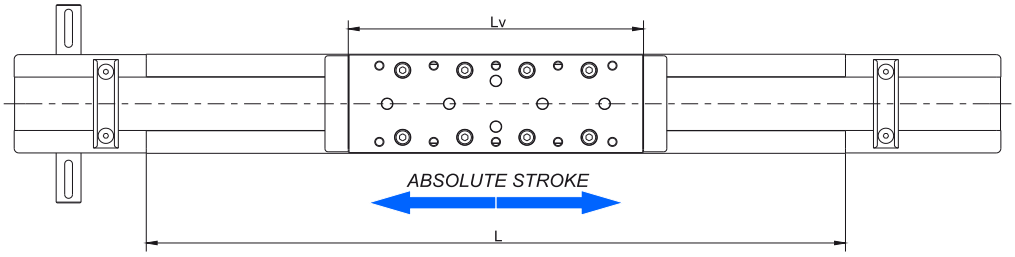

Multiple carriages

Carriages are connected inside the profile with an aluminium plate (or a toothed belt for the case of longer distances A)

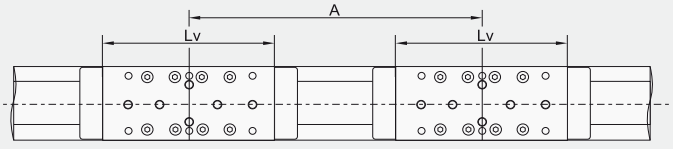

L = Effective stroke + 2 × Safety stroke + Lv + A × (nc - 1) + 42 mm

Ltotal = L + 215 mm

A ≥ Lv + 30 mm

For the case of A [mm] > Alim :

- a toothed belt for the connection of the carriages will be used,
- the following condition must be met:

A [mm] = Alim + 5 × i,

where i ∈ {1,2,3,...}.

	MTJ 80 S	MTJ / MRJ 80 L
Alim [mm]	711,5	801,5

In order to improve the products in this catalogue the specifications are subject to change without notice.

TECHNICAL DATA

General technical data

Linear Unit	Carriage length	Dynamic load capacity			Dynamic moment			Max. permissible loads						Moved mass	Max. Repeatability	* Max. length	* Max. stroke	** Min. stroke
								Forces		Moments								
	Lv [mm]	C [N]	Cy [N]	Cz [N]	Mx [Nm]	My [Nm]	Mz [Nm]	Fpy [N]	Fpz [N]	Mpx [Nm]	Mpy [Nm]	Mpz [Nm]		[kg]	[mm]	Lmax [mm]	[mm]	[mm]
MTJ 110 S	240	24800	/	/	315	220	220	5000	10130	135	180	100		3,25	± 0,08	6000	5748	65
MTJ 110 L	330	49600	/	/	630	3840	3840	10000	20260	295	1570	775		4,61	± 0,08		5658	65
MRJ 110 L	330	/	31000	14000	406	877	2325	6200	3410	99	214	465		4,78	± 0,08		5658	0

*For lengths / stroke over the stated value in the table above please contact us.
Values for max. stroke are not valid for multiple carriages
(equation of defining the linear unit length for particular size of the linear unit needs to be used).

**For minimum stroke below the stated value in the table above please contact us.

Operating conditions	
Operating temp.	0°C ~ +60°C
Duty cycle	100%

For operating temperature out of the presented range, please contact us.

Recommended values of loads

All the data of dynamic moments and load capacities stated in the upper table are theoretical without considering any safety factor. The safety factor depends on the application and its requested safety. We recommend a minimum safety factor (fs =5.0)

Modulus of elasticity :

E = 70000 N / mm^2

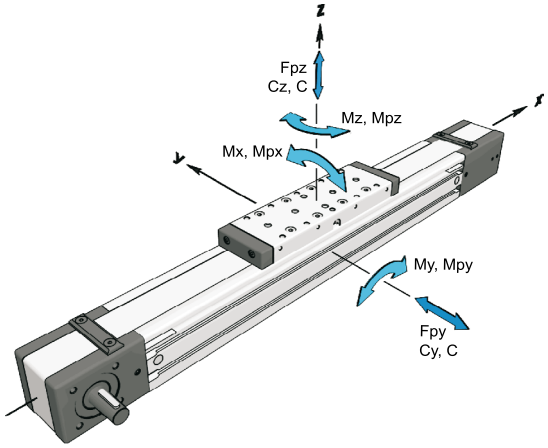

General technical data for double carriage

Linear Unit	Carriage version	Dynamic load capacity			* Dynamic moment			* Max. permissible loads				
								Forces		Moments		
		C [N]	Cy [N]	Cz [N]	Mx [Nm]	My [Nm]	Mz [Nm]	Fpy [N]	Fpz [N]	Mpx [Nm]	Mpy [Nm]	Mpz [Nm]
MTJ 110	S2	49600	/	/	630	24,8 × A	24,8 × A	10000	20260	270	10,1 × A	5,0 × A
MTJ 110	L2	99200	/	/	1260	49,6 × A	49,6 × A	20000	40520	590	20,3 × A	10,0 × A
MRJ 110	L2	/	62000	28000	812	14,0 × A	31,0 × A	12400	6830	198	3,4 × A	6,2 × A

*A - Distance between carriages [mm]. More info on following pages.

Presented values are for informational purposes only. Exact values can be calculated using our sizing selection tool on Unimotion web site.

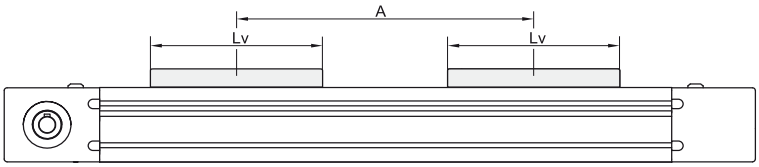

Drive and belt data

Linear Unit	* Max. travel speed	Max. drive torque	** No load torque		Puley drive ratio	Pulley diameter	Belt type	Belt width	Max. force transmited by belt	Specific spring constant	* Max. acceleration
		Ma	With strip	Without strip						Cspec	
	[m / s]	[Nm]	[Nm]	[Nm]	[mm / rev]	[mm]		[mm]	[N]	[N]	[m/s^2]
MRJ 110 L	10	68,5 with Keyway 82,6 without Keyway	2,2 × nc	2,0 × nc	300	95,49	AT 10	50	1730	2145000	70
MTJ 110 S	6		2,2 × nc	2,0 × nc							
MTJ 110 L			2,7 × nc	2,3 × nc							

*Max. travel speed and max. acceleration of Linear unit with the Corrosion-resistant protection strip is 1,5 m/s and 50 m/s^2, respectively.
For travel speed and acceleration over the stated value in the table above please contact us.

**The stated values are for strokes (and for distances between the carriages A) up to 500mm. No Load Torque value increases with stroke (and with A) elongation.
nc - Number of carriages

TECHNICAL DATA

Mass and mass moment of inertia

Linear Unit	* Mass of linear unit [kg]	* Mass moment of inertia [10^{-5} kg m^2]	Planar moment of inertia Iy [cm^4]	Iz [cm^4]
MTJ 110 S	15,0 + 0,015 × (Abs. stroke + (nc - 1) × A) + 3,25 × (nc - 1)	1065,0 + 0,137 × (Abs. stroke + (nc - 1) × A) + 741,9 × (nc - 1)	513,0	620,0
MTJ 110 L	17,7 + 0,015 × (Abs. stroke + (nc - 1) × A) + 4,61 × (nc - 1)	1381,0 + 0,137 × (Abs. stroke + (nc - 1) × A) + 1050,9 × (nc - 1)		
MRJ 110 L	16,3 + 0,0133 × (Abs. stroke + (nc - 1) × A) + 4,78 × (nc - 1)	1420,0 + 0,137 × (Abs. stroke + (nc - 1) × A) + 1089,6 × (nc - 1)		

*Absolute stroke [mm]
A - Distance between carriages [mm]. More info on following pages.
nc - Number of carriages

Mass calculation doesn´t include mass of motor, reduction gear, switches and clamps.

Deflection of the linear unit

Fixed - fixed mounting

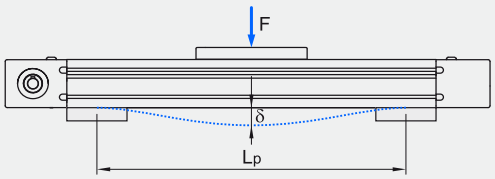

Fixed - free mounting

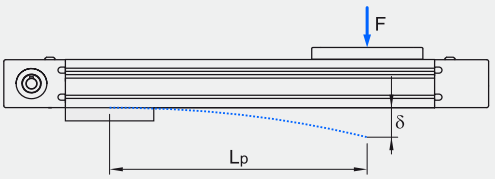

δ Maximum deflection of the linear unit [mm]
δmax Maximum permissible deflection of the linear unit [mm]
F Applied force [N]
Lp Unsupported profile length [mm]

The maximum permissible deflection δmax must not be exceeded. In the case that maximum deflection δ exceeds the maximum permissible deflection δmax additional profile supports are needed.

MTJ 110

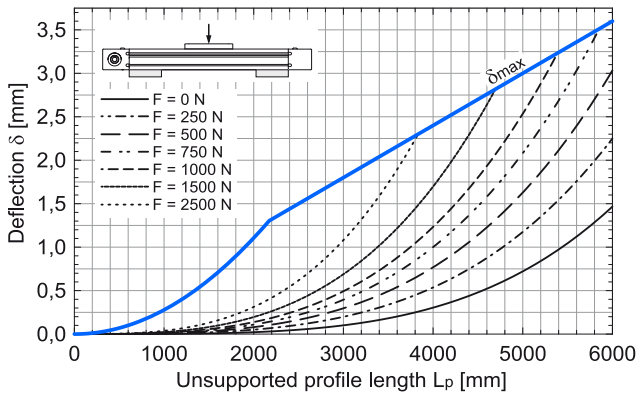

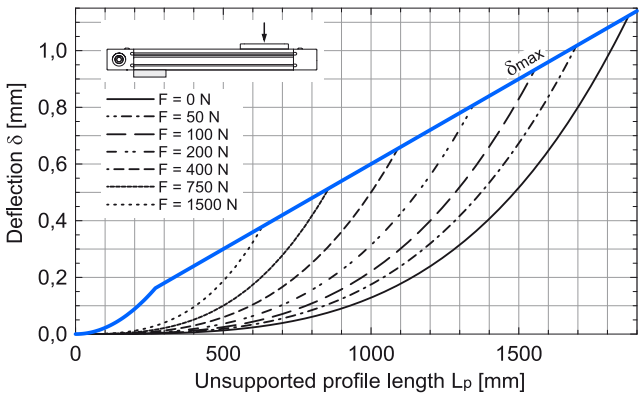

MRJ 110

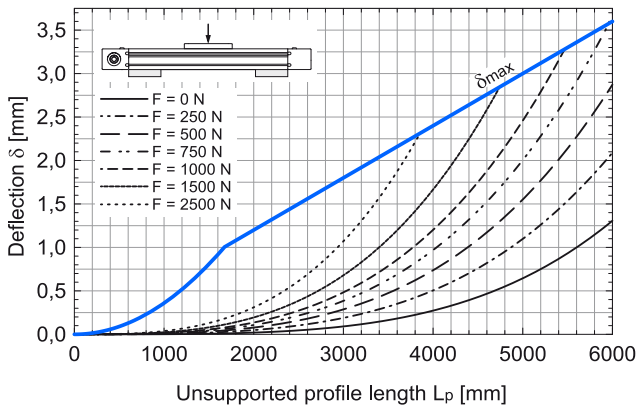

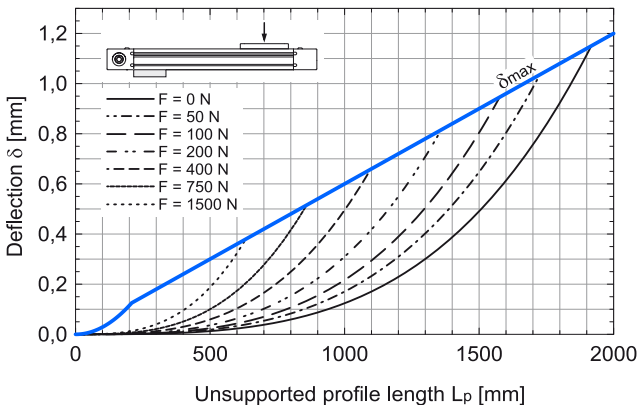

In order to improve the products in this catalogue the specifications are subject to change without notice.

DIMENSIONS

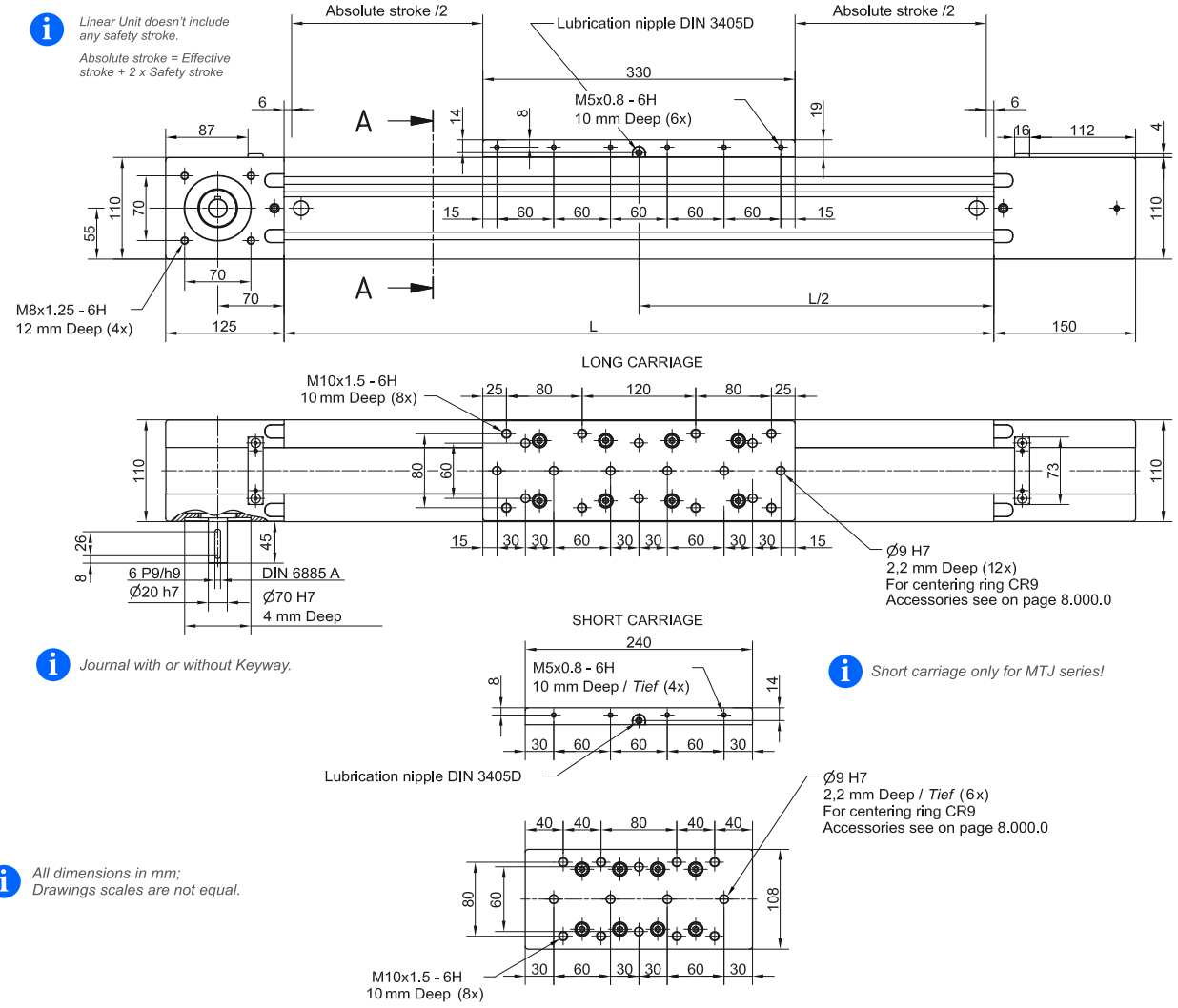

TYPE 0

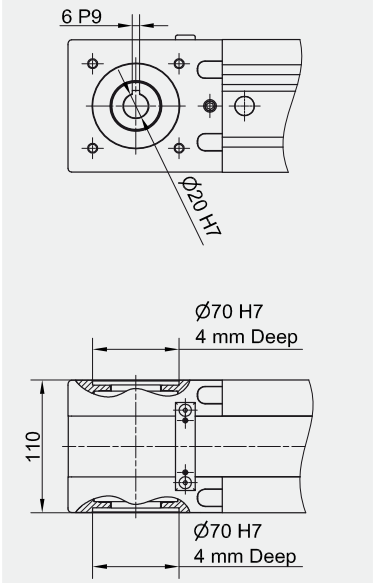

TYPE 1 L and 1 R

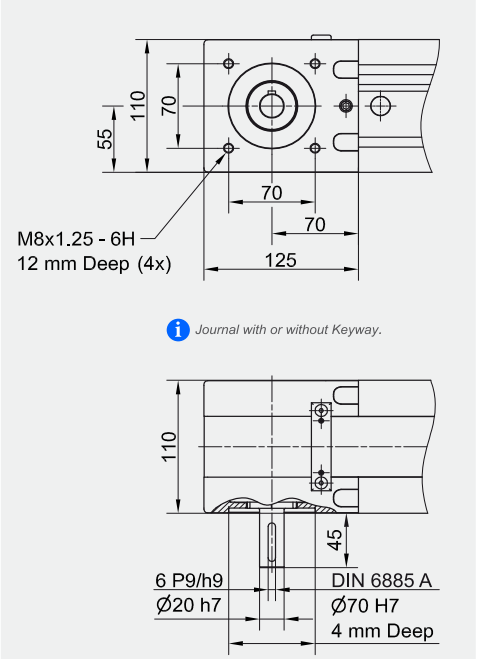

TYPE 2

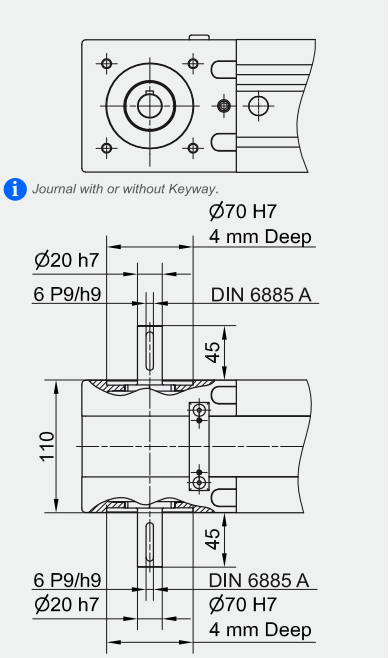

DIMENSIONS

MTJ 110

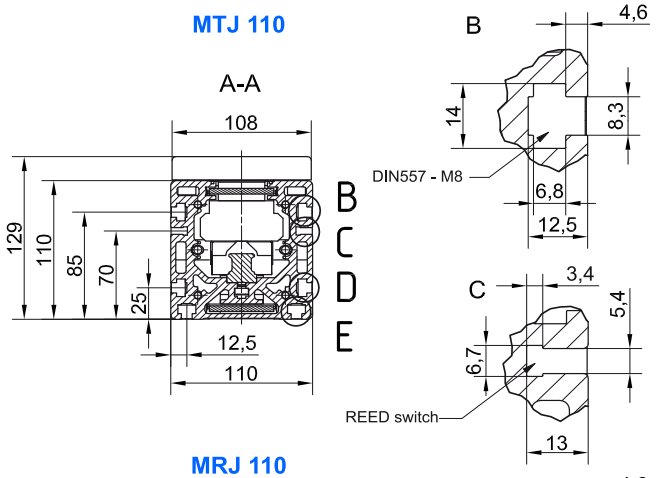

MRJ 110

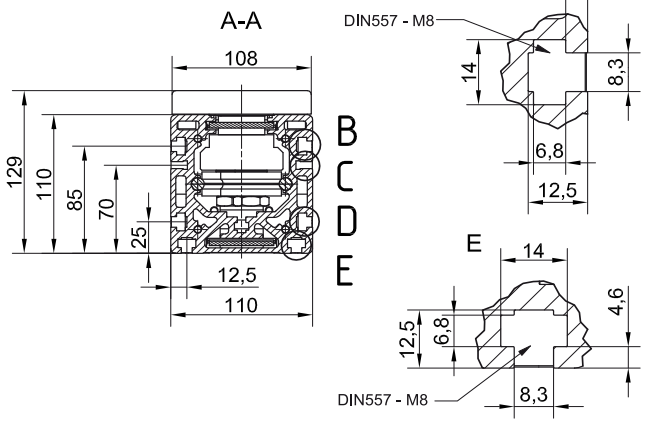

All dimensions in mm; Drawings scales are not equal.

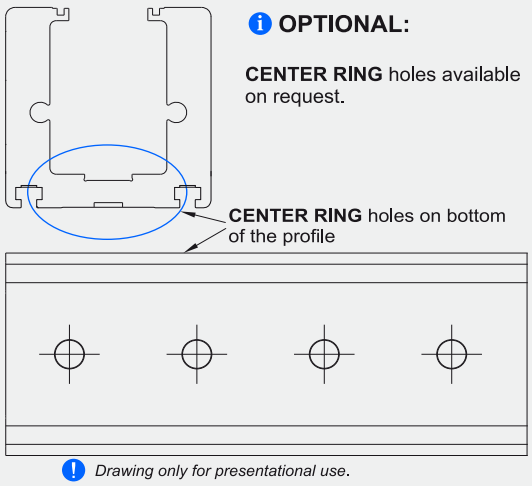

Drawing only for presentational use.

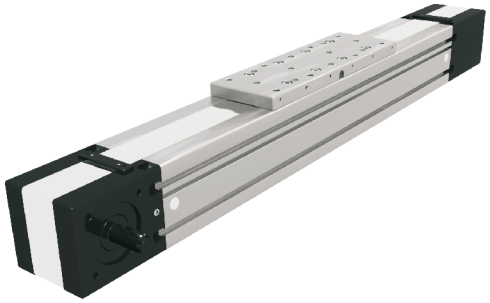

Mounting the drive

- by the **MOTOR ADAPTER WITH COUPLING** *(Page 8.020.0)*

Available on request.

Defining of the linear unit length

L = Effective stroke + 2 × Safety stroke + Lv + 12 mm

Ltotal = L + 275 mm

Lv - Long carriage = 330 mm

Lv - Short carriage = 240 mm

Left side (L)

Right side (R)

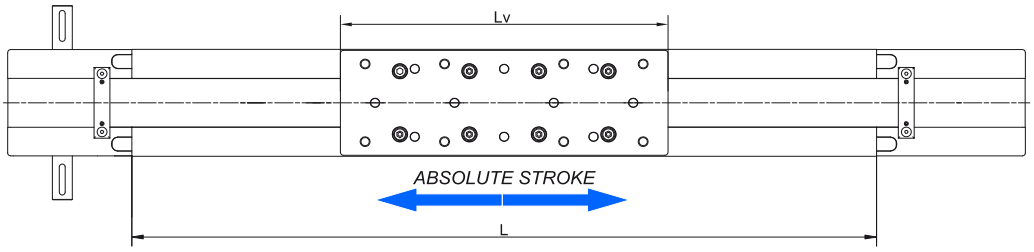

Multiple carriages

Carriages are connected inside the profile with an aluminium plate (or a toothed belt for the case of longer distances A)

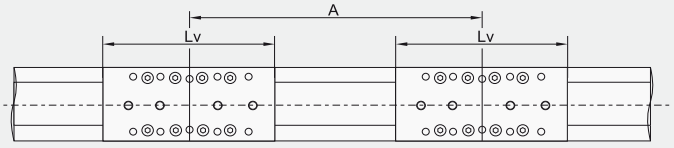

L = Effective stroke + 2 × Safety stroke + Lv + A × (nc - 1) + 12 mm

Ltotal = L + 275 mm

A ≥ Lv

For the case of A [mm] > Alim :

- a toothed belt for the connection of the carriages will be used,
- the following condition must be met:

A [mm] = Alim + 10 × i,

where i ∈ {1,2,3,...}.

	MTJ 110 S	MTJ / MRJ 110 L
Alim [mm]	716	806

In order to improve the products in this catalogue the specifications are subject to change without notice.

MTV

CHARACTERISTICS

The **MTV** series describes Linear Units with precision ball screw drive, integrated guide rail and compact dimensions. They provide high performances features, such as high speeds, good accuracy and repeatability.
They can easily be combined to multi-axis systems.
Excellent price-/performance ratio and quick delivery time are ensured.
The compact, precision-extruded aluminum Profile from 6063 AL with integrated Zero-backlash Ball rail guide system, allows high load capacities and optimal cycles for the movement of larger masses at high speed.
In the Linear Units MTV a precision ball screw, with tolerance class ISO7 (ISO5 on request), with reduced backlash of the ball nut is used.
A corrosion-resistant protection strip, protects all the parts in the profile from dust and other contaminants.
The aluminum profile includes T-slots for fixing the Linear Unit and for attaching sensors and switches. Also, a Reed switch can be used here.
The carriage, with central lubrication port, allows easy central re-lubrication of ball screw and Ball rail guide and provides the possibility to attach additional accessories on the side.
For the Linear Units MTV various adaptation options, for attaching (or redirecting), for Motors or Gearboxes are available.
To achieve higher speeds at the same stroke of the linear unit, the ball screw support system can be integrated. With this feature vibrations and deflections of the ball screw are reduced, therefore longer strokes are possible. The linear unit with integrated support system can have a higher axial load capacity.
Ball screw supports are made out of high quality plastic materials with high wear resistance properties.
Our system enables ball screw support in horizontal or vertical positioning of the linear unit.

A 2LR version of MTV linear unit is available, where two carriages are moving simultaneously in opposite directions. Both right and left handed precision ball screws are used, which are rigidly connected. The ball screw support system can also be integrated.

2LR version of the MTV linear unit

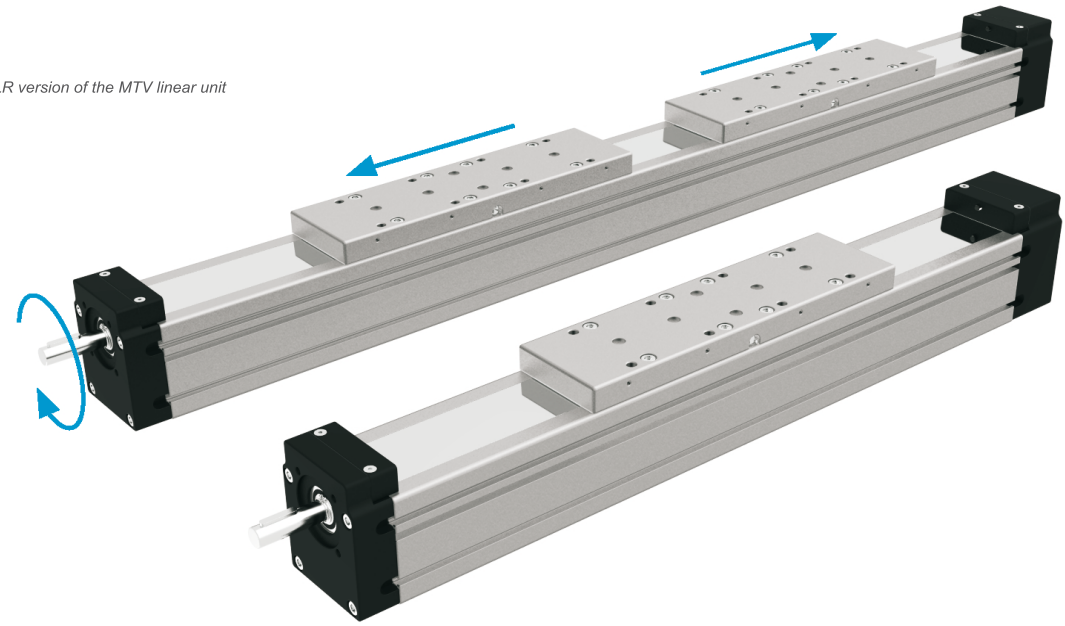

The aluminium profiles are manufactured according to the medium EN 12020-2 standard

Straightness = 0,35 mm/m; Max. torsion = 0,35 mm/m; Angular torsion = 0,2 mm/40 mm; Parallelism = 0,2 mm

In order to improve the products in this catalogue the specifications are subject to change without notice.

STRUCTURAL DESIGN

Standard version

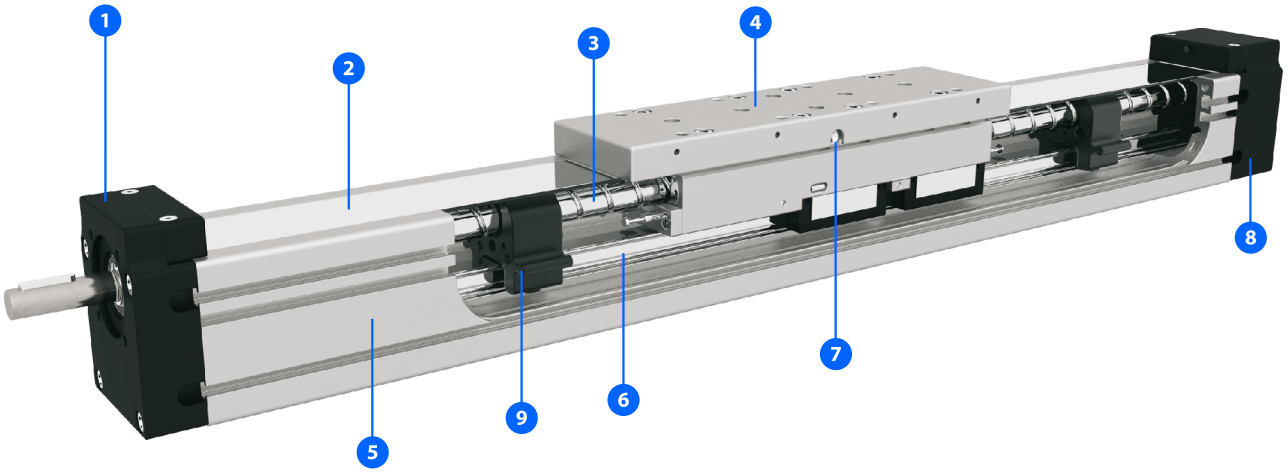

1 - Drive block with floating bearing (MTV 110 - fixed bearing)
2 - Corrosion-resistant protection strip
3 - Ball screw tolerance ISO7 (ISO5 available on request)
4 - Carriage; with built in Magnets
5 - Aluminium profile-Hard anodized
6 - Integrated Linear Ball Guideway
7 - Central lubrication port; both sides
8 - End block with fixed bearing (MTV 110 - floating bearing)
9 - Screw support - SA

2LR version

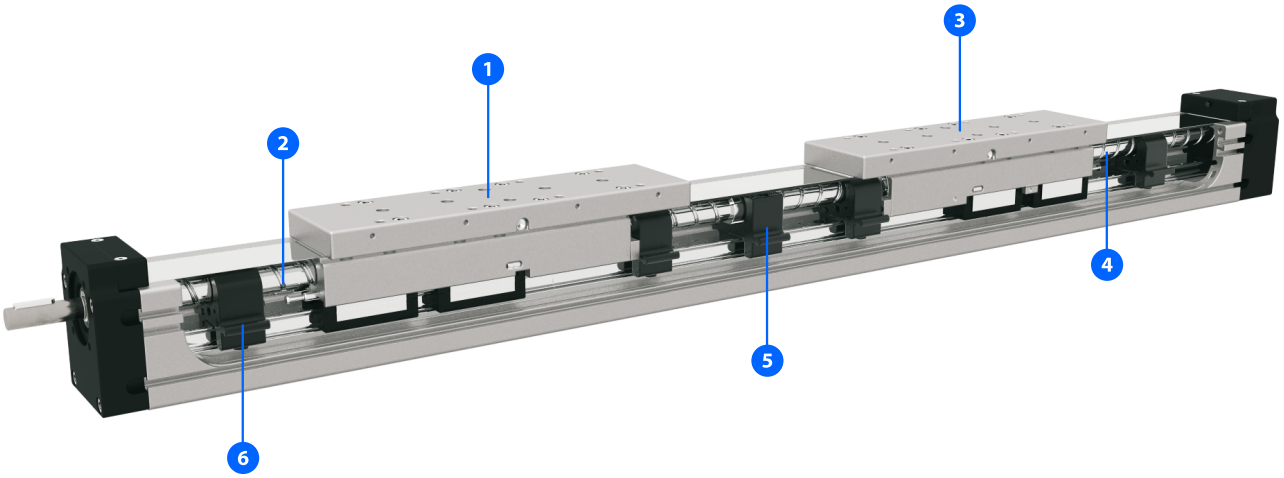

1 - Carriage; with build in right hand ball nut
2 - Right hand ball screw
3 - Carriage; with build in left hand ball nut
4 - Left hand ball screw
5 - Central screw support - fixed
6 - Screw support - SA

HOW TO ORDER

MTV - **65** - **1610** - **ISO7** - **0** - **650** - **2** - **250** - **2SA** - **2LR**

Series :

MTV

Size :

40

65

80

110

Ball screw :

MTV 40: Ø12×5, Ø12×10

MTV 65: Ø16×5, Ø16×10, Ø16×16

MTV 80: Ø20×5, Ø20×10, Ø20×20, Ø20×50

MTV 110: Ø32×5, Ø32×10, Ø32×20, Ø32×32

Ball screw tolerance :

ISO7 (Standard)

ISO5

Ball screw journal :

0 : Without keyway

1 : With keyway

*MTV 40 only available without keyway - **0***

Absolute stroke [mm] :
(Absolute stroke = Effective stroke + 2 x Safety stroke)

2LR version: Absolute stroke of one carriage

Number of carriages :

The stated number specifies the number of carriages on one Linear unit (up to 5 carriages avaliable)

Leave blank : For the case of one carriage

Connection between the carriages must be provided by the customer

Distance between two carriages [mm] :

Leave blank : For the case of one carriage

Number of screw supports n_{SA} :
(only even integer number - 2, 4, 6, 8, 10SA) - for MTV 40 and 65 max. 4SA is available

Leave blank : Without SA

2LR version :
Both right and left ball screws are used.

Leave blank : Standard version

Available for: MTV65: 16x5, 16x10
MTV80: 20x5

In order to improve the products in this catalogue the specifications are subject to change without notice.

TECHNICAL DATA

General technical data

Linear Unit	Carriage length	Dynamic Load capacity	Dynamic moment			Max. permissible loads					* Max. length	* Max. stroke
						Forces		Moments				
	Lv [mm]	C [N]	Mx [Nm]	My [Nm]	Mz [Nm]	Fpy [N]	Fpz [N]	Mpx [Nm]	Mpy [Nm]	Mpz [Nm]	Lmax [mm]	[mm]
MTV 40	150	4620	28	260	260	2300	3850	23	210	130	2900	2728

*For lengths / stroke over the stated value in the table above please contact us.
Values for max. stroke are not valid for multiple carriages and screw support SA
(equation of defining the linear unit length for particular size of the linear unit needs to be used).

Operating conditions	
Operating temp.	0°C ~ +60°C
Duty cycle	100%

For operating temperature out of the presented range, please contact us.

Recommended values of loads:

All the data of dynamic moments and load capacities stated in the upper table are theoretical without considering any safety factor. The safety factor depends on the application and its requested safety. We recommend a minimum safety factor (fs =5.0)

Modulus of elasticity

$E = 70000\ N / mm^2$

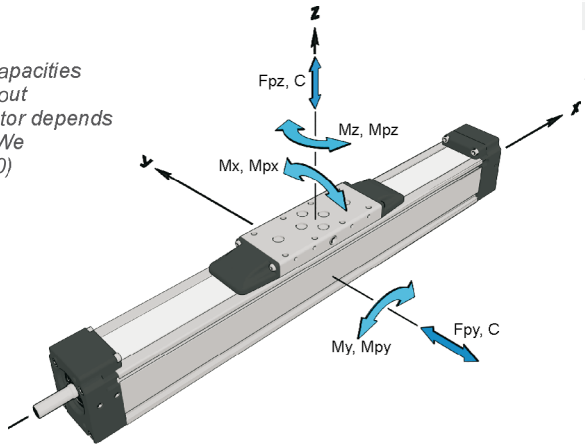

General technical data for double carriage

Linear Unit	Number of carriages	Dynamic Load capacity	* Dynamic moment			* Max. permissible loads				
						Forces		Moments		
		C [N]	Mx [Nm]	My [Nm]	Mz [Nm]	Fpy [N]	Fpz [N]	Mpx [Nm]	Mpy [Nm]	Mpz [Nm]
MTV 40	2	9240	56	4,6 × A	4,6 × A	4600	7690	46	3,8 × A	2,3 × A

*A - Distance between carriages [mm]. More info on following pages.

Presented values are for informational purposes only. Exact values can be calculated using our sizing selection tool on Unimotion web site.

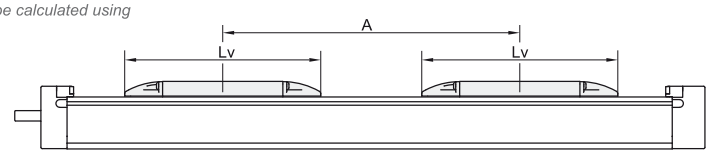

Ball Screw Drive data

Linear Unit	Ball screw	[3] Max. rotational speed	[1] Max. travel speed	Lead constant	[2] Max. Repeatability precision [mm]		Dynamic load capacity BS	Max. axial load	Max. drive torque	[4] Min. stroke	[1] Max. acceleration
	[d × l]	(Without SA) [rev / min]	(Without SA) [m / s]	[mm / rev]	STANDARD ISO7	ISO5	Ca [N]	Fx [N]	Ma [Nm]	[mm]	[m/s^2]
MTV 40	12 × 5	5800	0,49	5	± 0,02	± 0,01	5000	3400	3,0	30	20
	12 × 10		0,97	10	± 0,02	± 0,01	3800	2540	4,5		

[1] *Max. travel speed depends of the length of the linear unit, see diagram for particular size of the linear unit. For travel speed and acceleration over the stated value in the table above or diagrams please contact us.*

[2] *For the ball nut with the preload of 2%, please contact us.*

[3] *With SA version the max. rotation speed is limited to 3000 rev / min.*

[4] *For minimum stroke below the stated value in the table above please contact us.*

Planar moment of inertia

Linear Unit	Planar moment of inertia	
	Iy [cm^4]	Iz [cm^4]
MTV 40	10,0	11,0

TECHNICAL DATA

Mass, moved mass, mass moment of inertia and no load torque

Linear Unit	Ball screw [d × l]	Number of SA n_{SA}	* Mass of linear unit [kg]	* Moved mass [kg]
MTV 40	12 × 5	0	1,2 + 0,0028 × (Abs. stroke + (nc - 1) × A) + 0,47 × (nc - 1)	0,47 + 0,47 × (nc - 1)
		2	1,3 + 0,0028 × (Abs. stroke + (nc - 1) × A) + 0,47 × (nc - 1)	0,50 + 0,47 × (nc - 1)
		4	1,4 + 0,0028 × (Abs. stroke + (nc - 1) × A) + 0,47 × (nc - 1)	0,53 + 0,47 × (nc - 1)
	12 × 10	0	1,2 + 0,0028 × (Abs. stroke + (nc - 1) × A) + 0,47 × (nc - 1)	0,47 + 0,47 × (nc - 1)
		2	1,3 + 0,0028 × (Abs. stroke + (nc - 1) × A) + 0,47 × (nc - 1)	0,50 + 0,47 × (nc - 1)
		4	1,4 + 0,0028 × (Abs. stroke + (nc - 1) × A) + 0,47 × (nc - 1)	0,53 + 0,47 × (nc - 1)

Linear Unit	Ball screw [d × l]	Number of SA n_{SA}	* Mass moment of inertia [10^{-5} kg m^2]	** No load torque [Nm]
MTV 40	12 × 5	0	0,48 + 0,0012 × (Abs. stroke + (nc - 1) × A) + 0,03 × (nc - 1)	0,08 + 0,08 × (nc - 1)
		2	0,53 + 0,0012 × (Abs. stroke + (nc - 1) × A) + 0,03 × (nc - 1)	0,09 + 0,08 × (nc - 1)
		4	0,57 + 0,0012 × (Abs. stroke + (nc - 1) × A) + 0,03 × (nc - 1)	0,10 + 0,08 × (nc - 1)
	12 × 10	0	0,57 + 0,0012 × (Abs. stroke + (nc - 1) × A) + 0,12 × (nc - 1)	0,09 + 0,09 × (nc - 1)
		2	0,62 + 0,0012 × (Abs. stroke + (nc - 1) × A) + 0,12 × (nc - 1)	0,11 + 0,09 × (nc - 1)
		4	0,67 + 0,0012 × (Abs. stroke + (nc - 1) × A) + 0,12 × (nc - 1)	0,14 + 0,09 × (nc - 1)

*Absolute stroke [mm]
A - Distance between carriages [mm]. More info on following pages.
nc - Number of carriages

**The stated values are for strokes (and for distances between the carriages A) up to 500mm.
No Load Torque value increases with stroke (and with A) elongation.

Mass calculation doesn't include mass of motor, reduction gear, switches and clamps.

Deflection of the linear unit

Fixed - fixed mounting

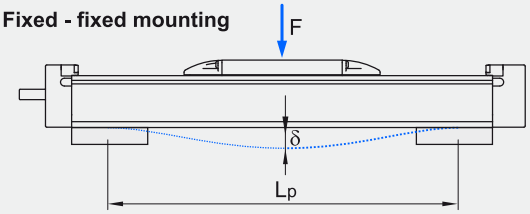

Fixed - free mounting

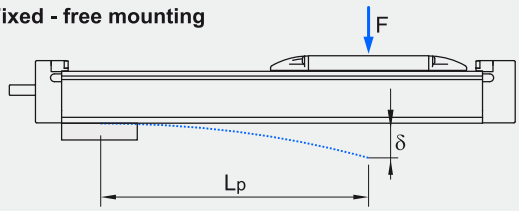

δ Maximum deflection of the linear unit [mm]
δmax Maximum permissible deflection of the linear unit [mm]
F Applied force [N]
Lp Unsupported profile length [mm]

The maximum permissible deflection δmax must not be exceeded. In the case that maximum deflection δ exceeds the maximum permissible deflection δmax additional profile supports are needed.

MTV 40

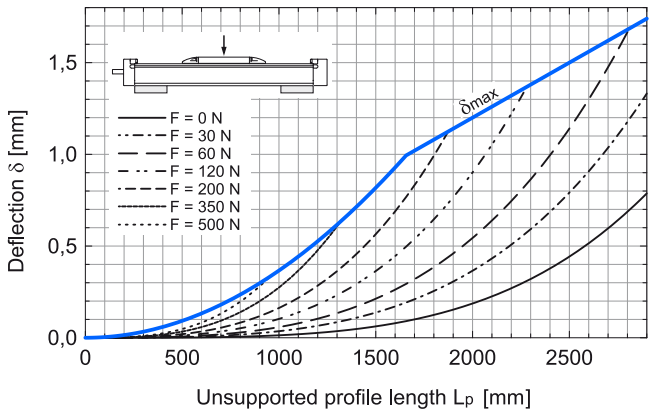

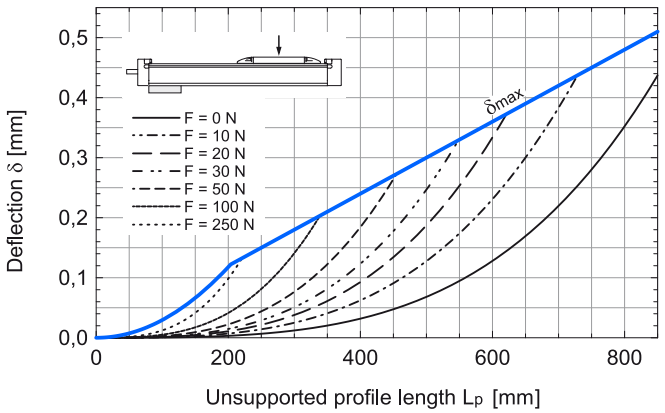

In order to improve the products in this catalogue the specifications are subject to change without notice.

DIMENSIONS

Linear Unit doesn't include any safety
Absolute stroke = Effective stroke + 2 x Safety stroke stroke.

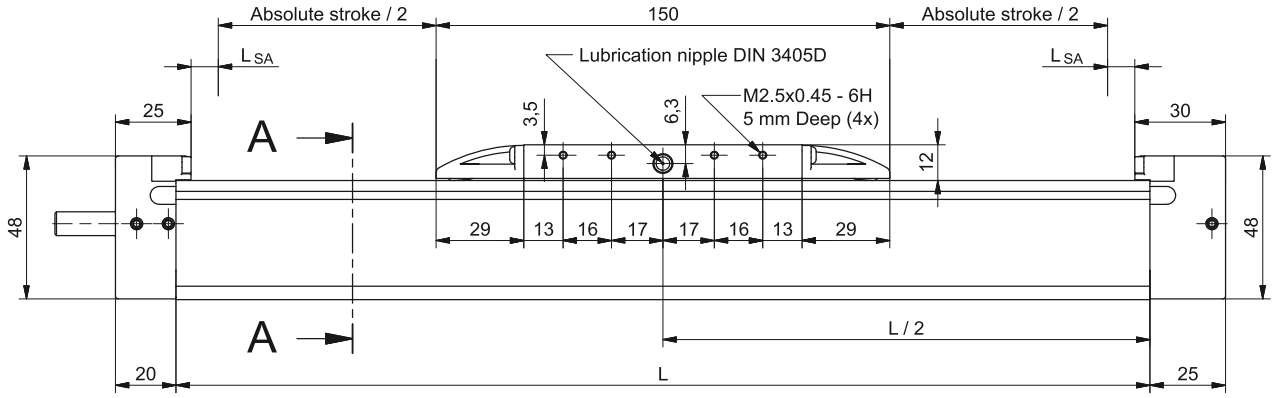

Journal without keyway.

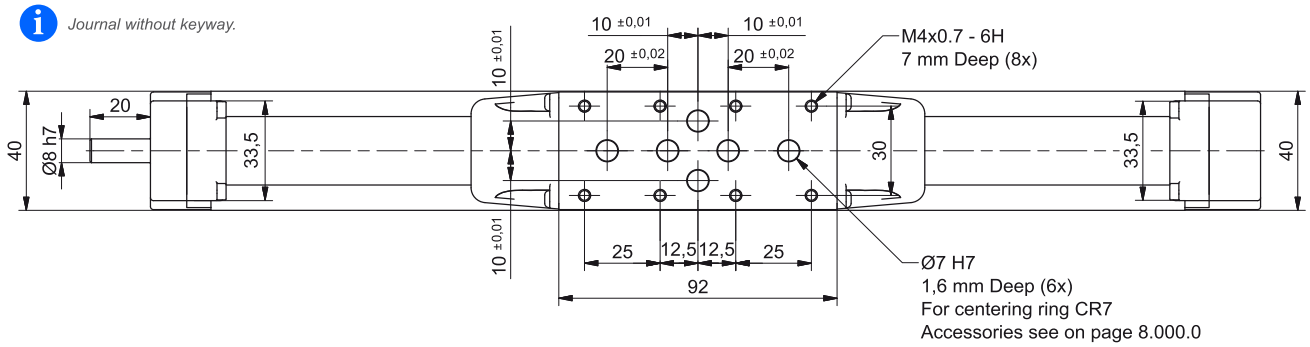

n_{SA}	L_{SA}
0	6,0
2SA	23,0
4SA	40,0

All dimensions in mm;
Drawings scales are not equal.

L_{SA} Additional length [mm]

Defining of the linear unit length

L = Effective stroke + 2 × Safety stroke + Lv + 2 × L_{SA} + A × (n_c - 1) + 10 mm

Ltotal = L + 45 mm, Lv = 150 mm

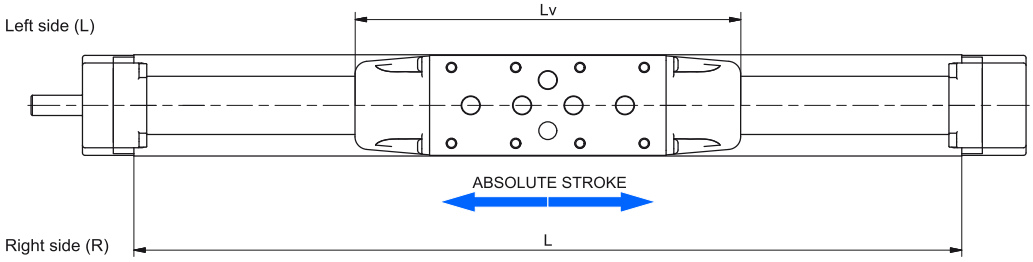

Multiple carriages

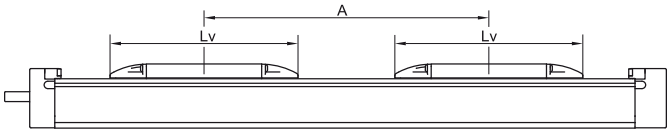

A ≥ Lv *Connection between the carriages must be provided by the customer*

n_c - Number of carriages

DIMENSIONS

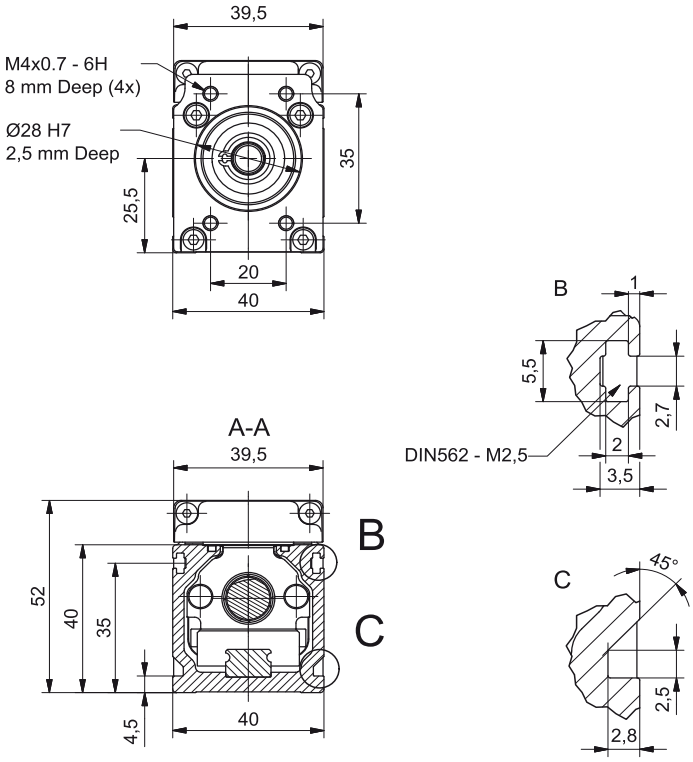

All dimensions in mm.
Drawings scales are not equal.

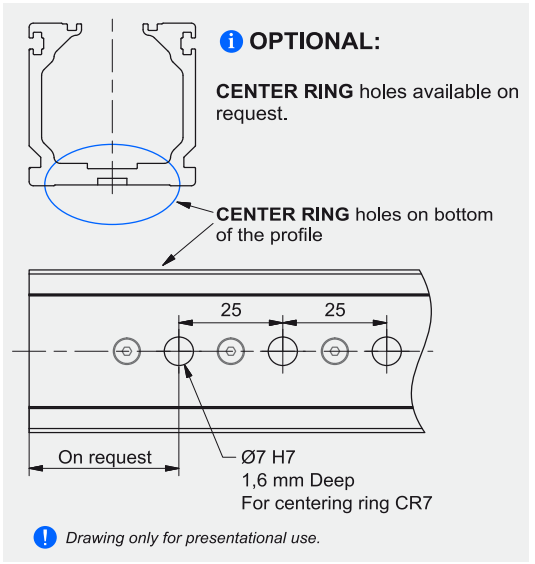

Drawing only for presentational use.

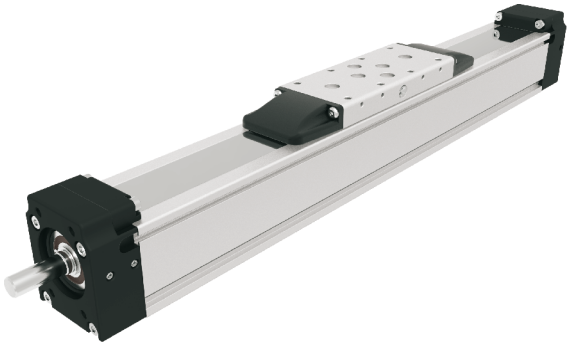

Mounting the drive

- by the **MOTOR SIDE DRIVE - MSD** *(Page 7.095.0)*
- by the **MOTOR ADAPTER WITH COUPLING** *(Page 8.020.0)*

Available on request.

Maximum travel speed as a function of the profile length (V_{max} - L curves)

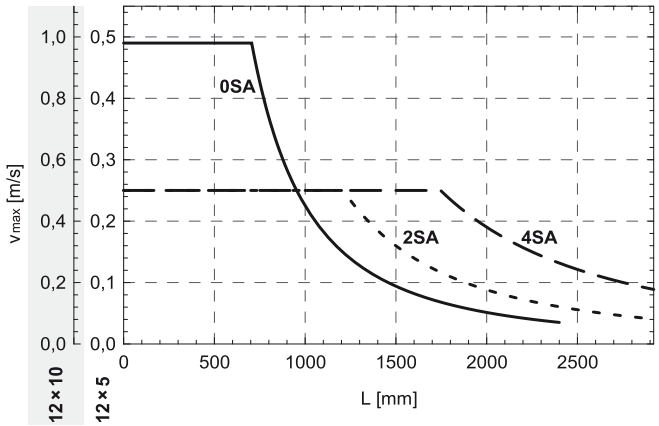

In order to improve the products in this catalogue the specifications are subject to change without notice.

TECHNICAL DATA

General technical data

Linear Unit	Carriage length	Dynamic Load capacity	Dynamic moment			Max. permissible loads					* Max. length	* Max. stroke
						Forces		Moments				
	Lv [mm]	C [N]	Mx [Nm]	My [Nm]	Mz [Nm]	Fpy [N]	Fpz [N]	Mpx [Nm]	Mpy [Nm]	Mpz [Nm]	Lmax [mm]	[mm]
MTV 65	220	19800	158	700	700	6540	10190	94	350	233	2920	2690
MTV 65 2LR	220	19800	158	700	700	6540	10190	94	350	233	5789	2667

*For lengths / stroke over the stated value in the table above please contact us.
Values for max. stroke are not valid for multiple carriages and screw support SA
(equation of defining the linear unit length for particular size of the linear unit needs to be used).

Operating conditions	
Operating temp.	0°C ~ +60°C
Duty cycle	100%

For operating temperature out of the presented range, please contact us.

Recommended values of loads:

All the data of dynamic moments and load capacities stated in the upper table are theoretical without considering any safety factor. The safety factor depends on the application and its requested safety. We recommend a minimum safety factor (fs =5.0)

Modulus of elasticity

$E = 70000\ N / mm^2$

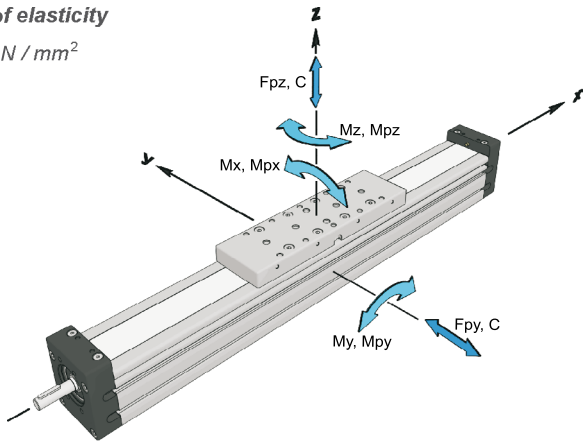

Standard version

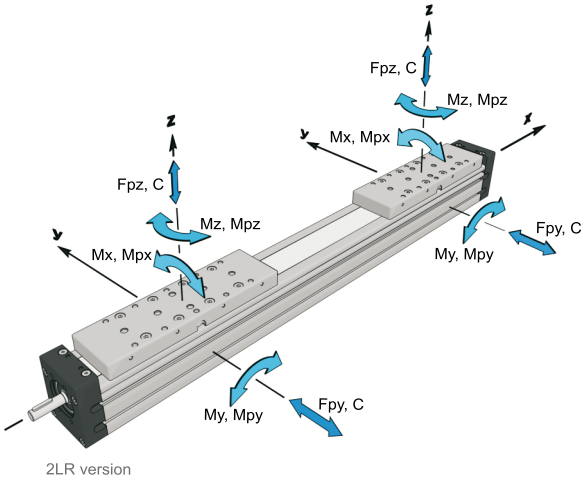

2LR version

General technical data for double carriage

Linear Unit	Number of carriages	Dynamic Load capacity	* Dynamic moment			* Max. permissible loads				
						Forces		Moments		
		C [N]	Mx [Nm]	My [Nm]	Mz [Nm]	Fpy [N]	Fpz [N]	Mpx [Nm]	Mpy [Nm]	Mpz [Nm]
MTV 65 / MTV 65 2LR	2	39600	316	19,8 × A	19,8 × A	13070	20380	188	10,2 × A	6,5 × A

*A - Distance between carriages [mm]. More info on following pages.

Presented values are for informational purposes only. Exact values can be calculated using our sizing selection tool on Unimotion web site.

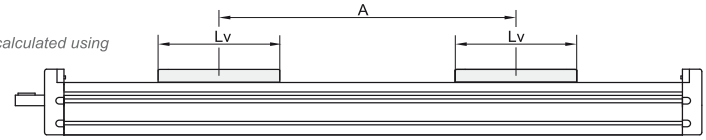

Ball Screw Drive data

Linear Unit	Ball screw	[3] Max. rotational speed	[1] Max. travel speed	Lead constant	[2] Max. Repeatability precision [mm]		Dynamic load capacity BS	[5] Max. axial load	Max. drive torque	[4] Min. stroke	[1] Max. acceleration
		(Without SA)	(Without SA)		STANDARD						
	[d × l]	[rev / min]	[m / s]	[mm / rev]	ISO7	ISO5	Ca [N]	Fx [N]	Ma [Nm]	[mm]	[m/s^2]
MTV 65 MTV 65 2LR	16 × 5	4200	0,35	5	± 0,02	± 0,01	13150	8700	5,5 with Keyway 7,7 without Keyway	40	20
	16 × 10		0,70	10	± 0,02	± 0,01	11550	6730	5,5 with Keyway		
	16 × 16		1,12	16	± 0,02	± 0,01	8170	4200	11,9 without Keyway		

[1] *Max. travel speed depends of the length of the linear unit, see diagram for particular size of the linear unit. For travel speed and acceleration over the stated value in the table above or diagrams please contact us.*

[2] *For the ball nut with the preload of 2%, please contact us.*

[3] *With SA or 2LR version the max. rotation speed is limited to 3000 rev / min.*

[4] *For minimum stroke below the stated value in the table above please contact us.*

[5] *In the case of 2RL version the axial load is total axial load of both carriages.*

TECHNICAL DATA

Mass, moved mass, mass moment of inertia and no load torque

Linear Unit	Ball screw [d × l]	Number of SA n_{SA}	* Mass of linear unit [kg]	* Moved mass [kg]
MTV 65	16 × 5	0	4,0 + 0,0073 × (Abs. stroke + (nc - 1) × A) + 1,5 × (nc - 1)	1,50 + 1,50 × (nc - 1)
		2	4,5 + 0,0073 × (Abs. stroke + (nc - 1) × A) + 1,5 × (nc - 1)	1,58 + 1,50 × (nc - 1)
		4	5,0 + 0,0073 × (Abs. stroke + (nc - 1) × A) + 1,5 × (nc - 1)	1,66 + 1,50 × (nc - 1)
	16 × 5 2LR version	0	7,2 + 0,0146 × (Abs. stroke + (nc - 1) × A) + 3,0 × (nc - 1)	3,00 + 3,00 × (nc - 1)
		2	8,2 + 0,0146 × (Abs. stroke + (nc - 1) × A) + 3,0 × (nc - 1)	3,16 + 3,00 × (nc - 1)
		4	9,2 + 0,0146 × (Abs. stroke + (nc - 1) × A) + 3,0 × (nc - 1)	3,32 + 3,00 × (nc - 1)
	16 × 10	0	4,0 + 0,0073 × (Abs. stroke + (nc - 1) × A) + 1,5 × (nc - 1)	1,50 + 1,50 × (nc - 1)
		2	4,5 + 0,0073 × (Abs. stroke + (nc - 1) × A) + 1,5 × (nc - 1)	1,58 + 1,50 × (nc - 1)
		4	5,0 + 0,0073 × (Abs. stroke + (nc - 1) × A) + 1,5 × (nc - 1)	1,66 + 1,50 × (nc - 1)
	16 × 10 2LR version	0	7,2 + 0,0146 × (Abs. stroke + (nc - 1) × A) + 3,0 × (nc - 1)	3,00 + 3,00 × (nc - 1)
		2	8,2 + 0,0146 × (Abs. stroke + (nc - 1) × A) + 3,0 × (nc - 1)	3,16 + 3,00 × (nc - 1)
		4	9,2 + 0,0146 × (Abs. stroke + (nc - 1) × A) + 3,0 × (nc - 1)	3,32 + 3,00 × (nc - 1)
	16 × 16	0	4,0 + 0,0073 × (Abs. stroke + (nc - 1) × A) + 1,5 × (nc - 1)	1,50 + 1,50 × (nc - 1)
		2	4,5 + 0,0073 × (Abs. stroke + (nc - 1) × A) + 1,5 × (nc - 1)	1,58 + 1,50 × (nc - 1)
		4	5,0 + 0,0073 × (Abs. stroke + (nc - 1) × A) + 1,5 × (nc - 1)	1,66 + 1,50 × (nc - 1)

Linear Unit	Ball screw [d × l]	Number of SA n_{SA}	* Mass moment of inertia [10^{-5} kg m^2]	** No load torque [Nm]
MTV 65	16 × 5	0	1,6 + 0,0052 × (Abs. stroke + (nc - 1) × A) + 0,09 × (nc - 1)	0,14 + 0,14 × (nc - 1)
		2	1,9 + 0,0052 × (Abs. stroke + (nc - 1) × A) + 0,09 × (nc - 1)	0,16 + 0,14 × (nc - 1)
		4	2,2 + 0,0052 × (Abs. stroke + (nc - 1) × A) + 0,09 × (nc - 1)	0,18 + 0,14 × (nc - 1)
	16 × 5 2LR version	0	2,9 + 0,0104 × (Abs. stroke + (nc - 1) × A) + 0,19 × (nc - 1)	0,28 + 0,28 × (nc - 1)
		2	3,5 + 0,0104 × (Abs. stroke + (nc - 1) × A) + 0,19 × (nc - 1)	0,32 + 0,28 × (nc - 1)
		4	4,1 + 0,0104 × (Abs. stroke + (nc - 1) × A) + 0,19 × (nc - 1)	0,35 + 0,28 × (nc - 1)
	16 × 10	0	1,9 + 0,0052 × (Abs. stroke + (nc - 1) × A) + 0,38 × (nc - 1)	0,15 + 0,15 × (nc - 1)
		2	2,2 + 0,0052 × (Abs. stroke + (nc - 1) × A) + 0,38 × (nc - 1)	0,19 + 0,15 × (nc - 1)
		4	2,5 + 0,0052 × (Abs. stroke + (nc - 1) × A) + 0,38 × (nc - 1)	0,22 + 0,15 × (nc - 1)
	16 × 10 2LR version	0	3,5 + 0,0104 × (Abs. stroke + (nc - 1) × A) + 0,76 × (nc - 1)	0,30 + 0,30 × (nc - 1)
		2	4,1 + 0,0104 × (Abs. stroke + (nc - 1) × A) + 0,76 × (nc - 1)	0,34 + 0,30 × (nc - 1)
		4	4,8 + 0,0104 × (Abs. stroke + (nc - 1) × A) + 0,76 × (nc - 1)	0,37 + 0,30 × (nc - 1)
	16 × 16	0	2,5 + 0,0052 × (Abs. stroke + (nc - 1) × A) + 0,97 × (nc - 1)	0,20 + 0,20 × (nc - 1)
		2	2,8 + 0,0052 × (Abs. stroke + (nc - 1) × A) + 0,97 × (nc - 1)	0,26 + 0,20 × (nc - 1)
		4	3,2 + 0,0052 × (Abs. stroke + (nc - 1) × A) + 0,97 × (nc - 1)	0,31 + 0,20 × (nc - 1)

*Absolute stroke [mm]
A - Distance between carriages [mm]. More info on following pages.
nc - Number of carriages

**The stated values are for strokes (and for distances between the carriages A) up to 500mm.
No Load Torque value increases with stroke (and with A) elongation.

Mass calculation doesn´t include mass of motor, reduction gear, switches and clamps.

Planar moment of inertia

Linear Unit	Planar moment of inertia	
	I_y [cm^4]	I_z [cm^4]
MTV 65 MTV 65 2LR	71,3	89,4

In order to improve the products in this catalogue the specifications are subject to change without notice.

TECHNICAL DATA

Deflection of the linear unit

Fixed - fixed mounting

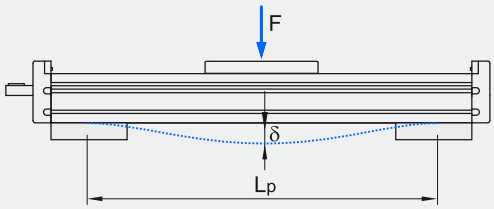

Fixed - free mounting

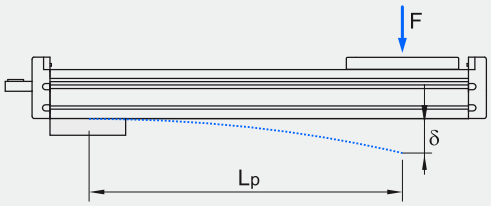

δ Maximum deflection of the linear unit [mm]
δmax Maximum permissible deflection of the linear unit [mm]
F Applied force [N]
Lp Unsupported profile length [mm]

The maximum permissible deflection δmax must not be exceeded. In the case that maximum deflection δ exceeds the maximum permissible deflection δmax additional profile supports are needed.

MTV 65

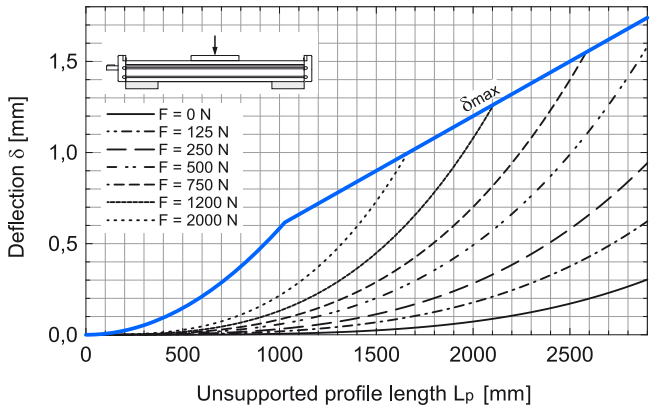

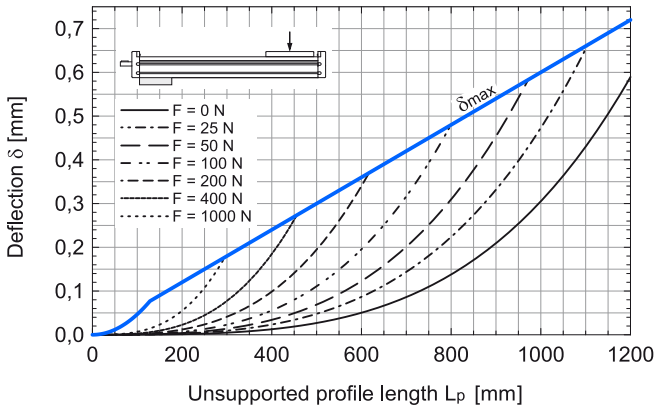

Maximum travel speed as a function of the profile length (Vmax - L curves)

MTV 65

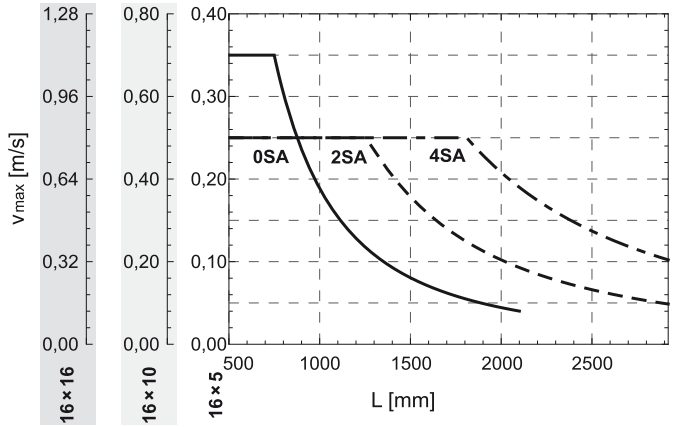

TECHNICAL DATA

Deflection of the 2LR version

Fixed - fixed mounting

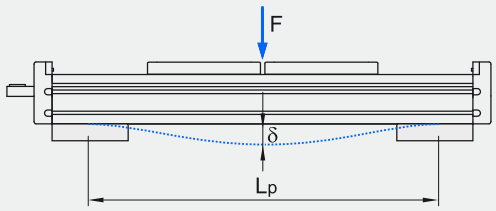

δ Maximum deflection of the linear unit [mm]
δmax Maximum permissible deflection of the linear unit [mm]
F Applied force [N]
Lp Unsupported profile length [mm]

The maximum permissible deflection δmax must not be exceeded. In the case that maximum deflection δ exceeds the maximum permissible deflection δmax additional profile supports are needed.

MTV 65 2LR

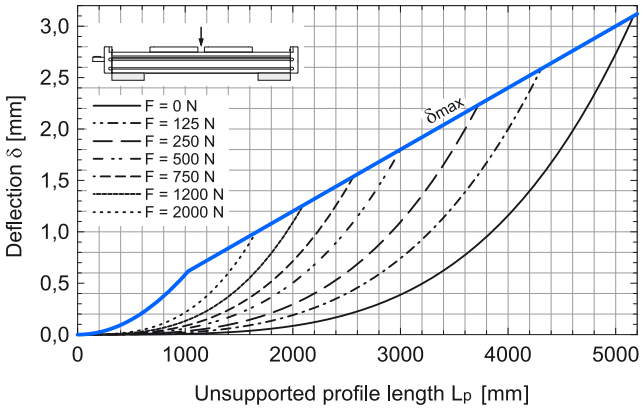

Maximum travel speed as a function of the profile length (Vmax - L curves)

MTV 65 2LR

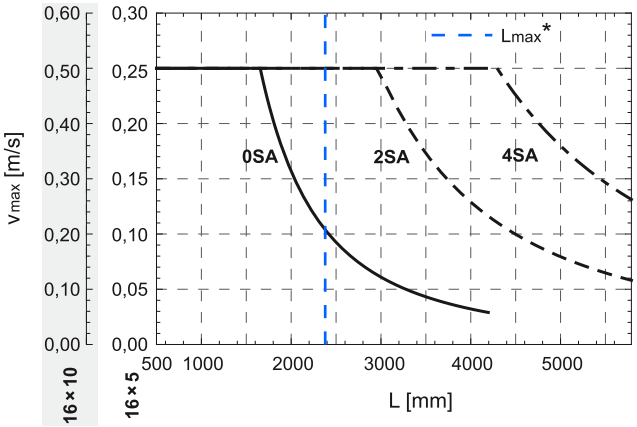

* Max. length Lmax of MTV 65 2LR linear unit with 16x10 ball screw.

In order to improve the products in this catalogue the specifications are subject to change without notice.

DIMENSIONS

Linear Unit doesn't include any safety
Absolute stroke = Effective stroke + 2 x Safety stroke stroke.

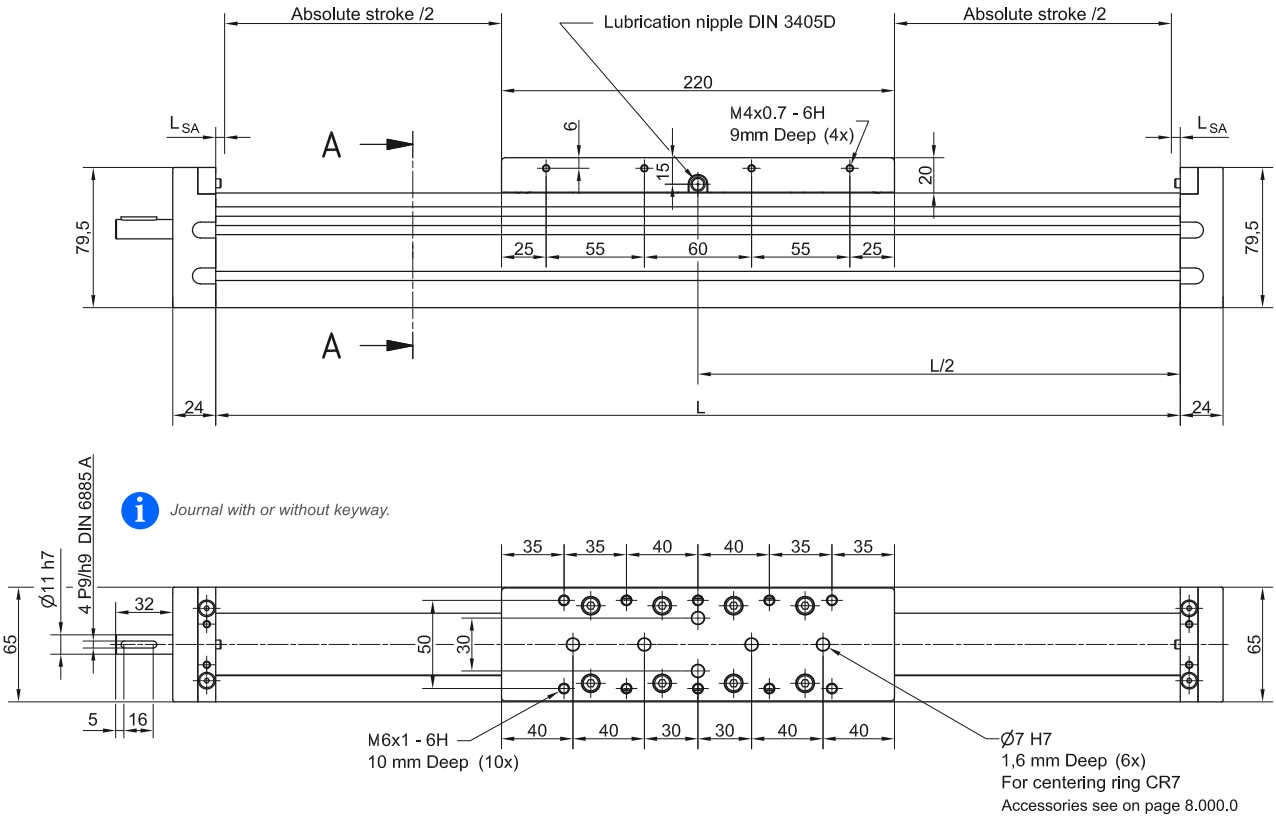

n	L_{SA}
0	5,0
2SA	31,0
4SA	62,0

L_{SA} Additional length [mm]

All dimensions in mm;
Drawings scales are not equal.

2LR version

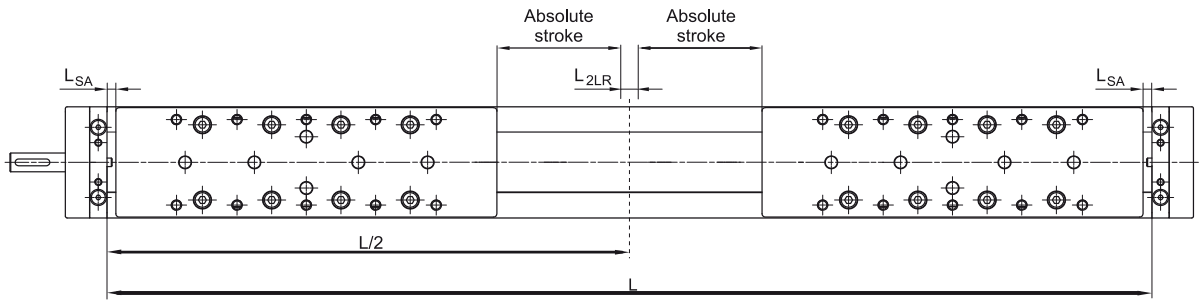

n	L_{SA}	L_{2LR}
0	5,0	5,0
2SA	31,0	67,0
4SA	62,0	129,0

L_{SA} Additional length [mm]
L_{2LR} Min. distance between carriages [mm]

DIMENSIONS

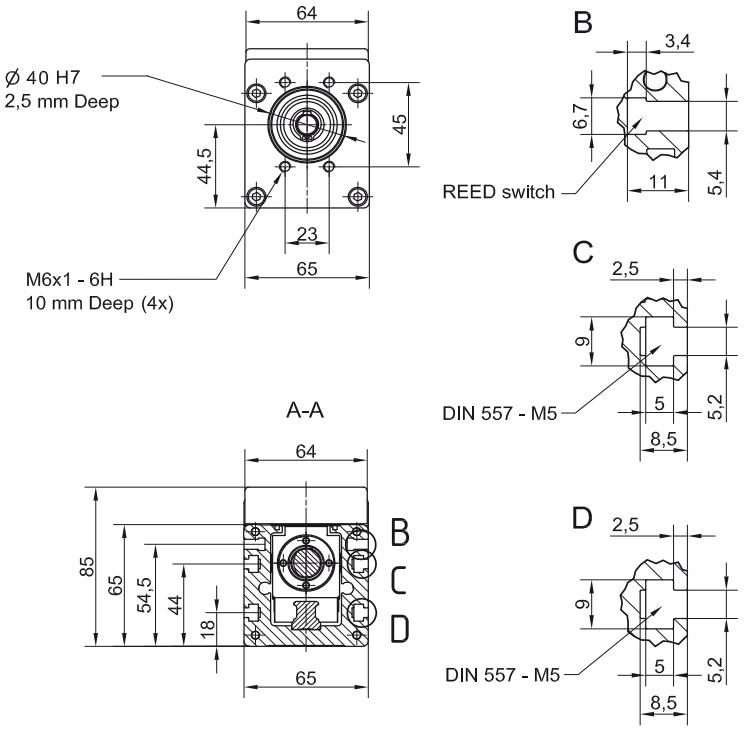

OPTIONAL:

TAP / PIN holes available on request.

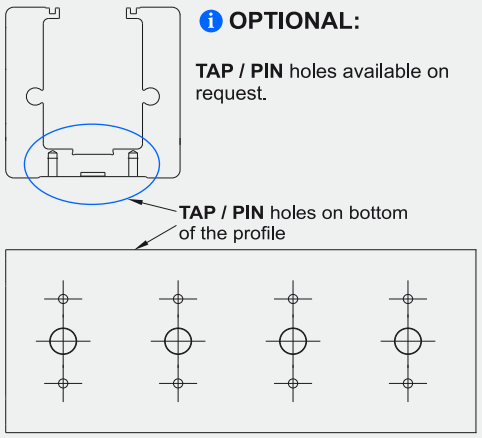

Drawing only for presentational use

All dimensions in mm.
Drawings scales are not equal.

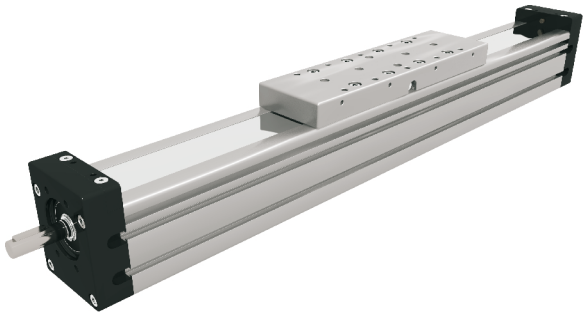

Mounting the drive

- by the **MOTOR SIDE DRIVE - MSD** *(Page 7.095.0)*
- by the **MOTOR ADAPTER WITH COUPLING** *(Page 8.020.0)*

Available on request.

Defining of the linear unit length

Standard version

L = Effective stroke + 2 × Safety stroke + Lv + 2 × LSA + A × (nc - 1)

Ltotal = L + 48 mm, Lv = 220 mm

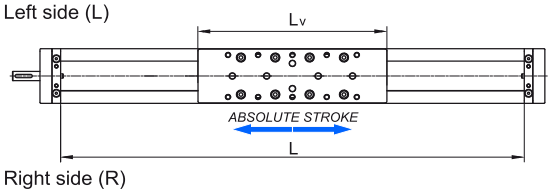

Multiple carriages

A ≥ Lv *Connection between the carriages must be provided by the customer*

nc - Number of carriages

Version 2LR

L = 2 × (Effective stroke + 2 × Safety stroke) + 2 × Lv + 2 × LSA + L2LR + A × (nc - 1)

Ltotal = L + 48 mm, Lv = 220 mm

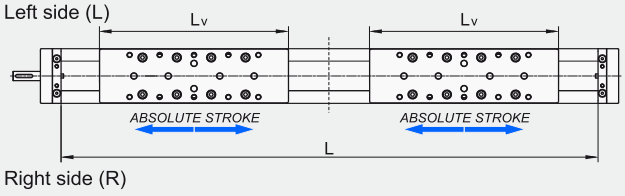

Multiple carriages

A ≥ Lv *Connection between the carriages must be provided by the customer*

nc - Number of carriages

In order to improve the products in this catalogue the specifications are subject to change without notice.

TECHNICAL DATA

General technical data

Linear Unit	Carriage length	Dynamic Load capacity	Dynamic moment			Max. permissible loads					* Max. length	* Max. stroke
						Forces		Moments				
	Lv [mm]	C [N]	Mx [Nm]	My [Nm]	Mz [Nm]	Fpy [N]	Fpz [N]	Mpx [Nm]	Mpy [Nm]	Mpz [Nm]	Lmax [mm]	[mm]
MTV 80	290	34200	370	1470	1470	8930	15070	150	500	384	5480	5163
MTV 80 2LR	290	34200	370	1470	1470	8930	15070	150	500	384	11055	5224

*For lengths / stroke over the stated value in the table above please contact us.
Values for max. stroke are not valid for multiple carriages and screw support SA
(equation of defining the linear unit length for particular size of the linear unit needs to be used).

Operating conditions	
Operating temp.	0°C ~ +60°C
Duty cycle	100%

For operating temperature out of the presented range, please contact us.

Recommended values of loads:

All the data of dynamic moments and load capacities stated in the upper table are theoretical without considering any safety factor. The safety factor depends on the application and its requested safety. We recommend a minimum safety factor (fs =5.0)

Modulus of elasticity

$E = 70000\ N / mm^2$

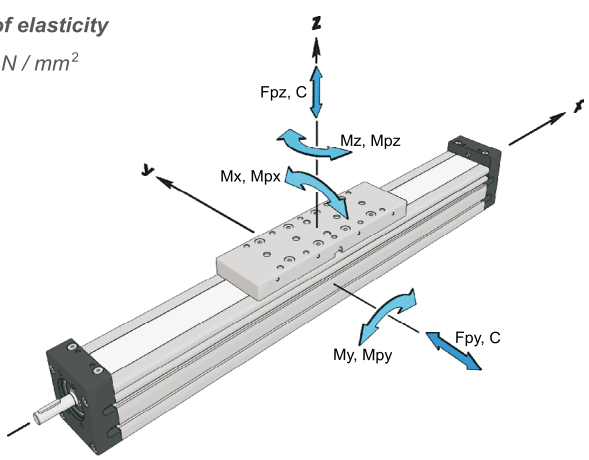

Standard version

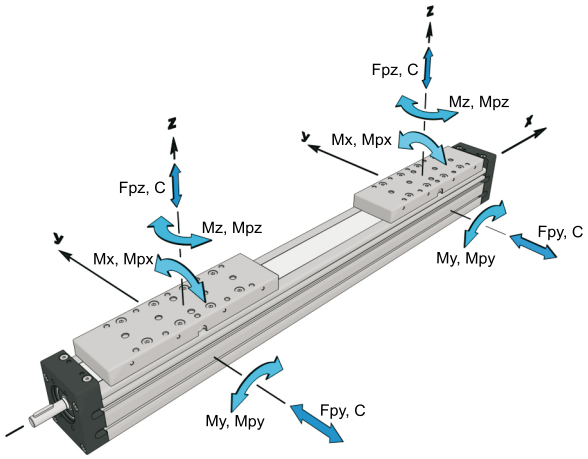

2LR version

General technical data for double carriage

Linear Unit	Number of carriages	Dynamic Load capacity	* Dynamic moment			* Max. permissible loads				
						Forces		Moments		
		C [N]	Mx [Nm]	My [Nm]	Mz [Nm]	Fpy [N]	Fpz [N]	Mpx [Nm]	Mpy [Nm]	Mpz [Nm]
MTV 80 / MTV 80 2LR	2	68400	740	34,2 × A	34,2 × A	17860	30130	300	15,0 × A	8,9 × A

*A - Distance between carriages [mm]. More info on following pages.

Presented values are for informational purposes only. Exact values can be calculated using our sizing selection tool on Unimotion web site.

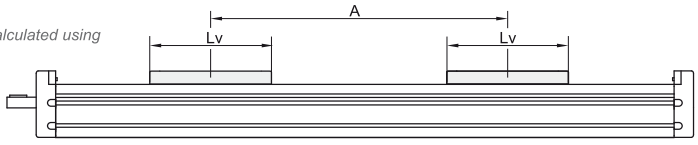

Ball Screw Drive data

Linear Unit	Ball screw	3 Max. rotational speed	1 Max. travel speed	Lead constant	2 Max. Repeatability precision [mm]		Dynamic load capacity BS	5 Max. axial load	Max. drive torque	4 Min. stroke	1 Max. acceleration
		(Without SA)	(Without SA)		STANDARD						
	[d × l]	[rev / min]	[m / s]	[mm / rev]	ISO7	ISO5	Ca [N]	Fx [N]	Ma [Nm]	[mm]	[m/s^2]
MTV 80 MTV 80 2LR	20 × 5	3300	0,28	5	± 0,02	± 0,01	14800	14800	11,9 with Keyway 13,0 without Keyway	55	20
	20 × 10		0,55	10	± 0,02	± 0,01	15900	13850	11,9 with Keyway 24,5 without Keyway		
	20 × 20		1,10	20	± 0,02	± 0,01	16250	6930			
	20 × 50	3000	2,50	50	± 0,02	± 0,01	13000	2770			

[1] *Max. travel speed depends of the length of the linear unit, see diagram for particular size of the linear unit. For travel speed and acceleration over the stated value in the table above or diagrams please contact us.*

[2] *For the ball nut with the preload of 2%, please contact us.*

[3] *With SA or 2LR version the max. rotation speed is limited to 3000 rev / min.*

[4] *For minimum stroke below the stated value in the table above please contact us.*

[5] *In the case of 2RL version the axial load is total axial load of both carriages.*

TECHNICAL DATA

Mass, moved mass, mass moment of inertia and no load torque

Linear Unit	Ball screw [d × l]	Number of SA n_{SA}	* Mass of linear unit [kg]	* Moved mass [kg]
MTV 80	20 × 5	0	8,2 + 0,0114 × (Abs. stroke + (nc - 1) × A) + 3,0 × (nc - 1)	3,00 + 3,00 × (nc - 1)
		2	8,9 + 0,0114 × (Abs. stroke + (nc - 1) × A) + 3,0 × (nc - 1)	3,07 + 3,00 × (nc - 1)
		4 / 6 / 8 / 10	9,7 + 0,4 * (n_{SA} - 4) + 0,0114 × (Abs. stroke + (nc - 1) × A) + 3,0 × (nc - 1)	3,21 + 0,035 * (n_{SA} - 4) + 3,00 × (nc - 1)
	20 × 5 2LR version	0	14,6 + 0,0228 × (Abs. stroke + (nc - 1) × A) + 6,0 × (nc - 1)	6,00 + 6,00 × (nc - 1)
		2	15,9 + 0,0228 × (Abs. stroke + (nc - 1) × A) + 6,0 × (nc - 1)	6,14 + 6,00 × (nc - 1)
		4 / 6 / 8 / 10	17,6 + 0,8 * (n_{SA} - 4) + 0,0228 × (Abs. stroke + (nc - 1) × A) + 6,0 × (nc - 1)	6,42 + 0,07 * (n_{SA} - 4) + 6,00 × (nc - 1)
	20 × 10	0	8,2 + 0,0114 × (Abs. stroke + (nc - 1) × A) + 3,0 × (nc - 1)	3,00 + 3,00 × (nc - 1)
		2	8,9 + 0,0114 × (Abs. stroke + (nc - 1) × A) + 3,0 × (nc - 1)	3,07 + 3,00 × (nc - 1)
		4 / 6 / 8 / 10	9,7 + 0,4 * (n_{SA} - 4) + 0,0114 × (Abs. stroke + (nc - 1) × A) + 3,0 × (nc - 1)	3,21 + 0,035 * (n_{SA} - 4) + 3,00 × (nc - 1)
	20 × 20	0	8,2 + 0,0114 × (Abs. stroke + (nc - 1) × A) + 3,0 × (nc - 1)	3,00 + 3,00 × (nc - 1)
		2	8,9 + 0,0114 × (Abs. stroke + (nc - 1) × A) + 3,0 × (nc - 1)	3,07 + 3,00 × (nc - 1)
		4 / 6 / 8 / 10	9,7 + 0,4 * (n_{SA} - 4) + 0,0114 × (Abs. stroke + (nc - 1) × A) + 3,0 × (nc - 1)	3,21 + 0,035 * (n_{SA} - 4) + 3,00 × (nc - 1)
	20 × 50	0	8,2 + 0,0114 × (Abs. stroke + (nc - 1) × A) + 3,0 × (nc - 1)	3,00 + 3,00 × (nc - 1)
		2	8,9 + 0,0114 × (Abs. stroke + (nc - 1) × A) + 3,0 × (nc - 1)	3,07 + 3,00 × (nc - 1)
		4 / 6 / 8 / 10	9,7 + 0,4 * (n_{SA} - 4) + 0,0114 × (Abs. stroke + (nc - 1) × A) + 3,0 × (nc - 1)	3,21 + 0,035 * (n_{SA} - 4) + 3,00 × (nc - 1)

Linear Unit	Ball screw [d × l]	Number of SA n_{SA}	* Mass moment of inertia [10^{-5} kg m^2]	* ** No load torque [Nm]
MTV 80	20 × 5	0	5,6 + 0,0127 × (Abs. stroke + (nc - 1) × A) + 0,19 × (nc - 1)	0,23 + 0,23 × (nc - 1)
		2	6,2 + 0,0127 × (Abs. stroke + (nc - 1) × A) + 0,19 × (nc - 1)	0,26 + 0,23 × (nc - 1)
		4 / 6 / 8 / 10	7,0 + 0,4 * (n_{SA} - 4) + 0,0127 × (Abs. stroke + (nc - 1) × A) + 0,19 × (nc - 1)	0,31 + 0,015 * (n_{SA} - 4) + 0,23 × (nc - 1)
	20 × 5 2LR version	0	9,5 + 0,0254 × (Abs. stroke + (nc - 1) × A) + 0,38 × (nc - 1)	0,46 + 0,46 × (nc - 1)
		2	10,7 + 0,0254 × (Abs. stroke + (nc - 1) × A) + 0,38 × (nc - 1)	0,51 + 0,46 × (nc - 1)
		4 / 6 / 8 / 10	12,3 + 0,8 * (n_{SA} - 4) + 0,0254 × (Abs. stroke + (nc - 1) × A) + 0,38 × (nc - 1)	0,62 + 0,03 * (n_{SA} - 4) + 0,46 × (nc - 1)
	20 × 10	0	6,2 + 0,0127 × (Abs. stroke + (nc - 1) × A) + 0,76 × (nc - 1)	0,25 + 0,25 × (nc - 1)
		2	6,8 + 0,0127 × (Abs. stroke + (nc - 1) × A) + 0,76 × (nc - 1)	0,30 + 0,25 × (nc - 1)
		4 / 6 / 8 / 10	7,6 + 0,4 * (n_{SA} - 4) + 0,0127 × (Abs. stroke + (nc - 1) × A) + 0,76 × (nc - 1)	0,41 + 0,025 * (n_{SA} - 4) + 0,25 × (nc - 1)
	20 × 20	0	8,5 + 0,0127 × (Abs. stroke + (nc - 1) × A) + 3,04 × (nc - 1)	0,30 + 0,30 × (nc - 1)
		2	9,1 + 0,0127 × (Abs. stroke + (nc - 1) × A) + 3,04 × (nc - 1)	0,41 + 0,30 × (nc - 1)
		4 / 6 / 8 / 10	10,1 + 0,5 * (n_{SA} - 4) + 0,0127 × (Abs. stroke + (nc - 1) × A) + 3,04 × (nc - 1)	0,62 + 0,055 * (n_{SA} - 4) + 0,30 × (nc - 1)
	20 × 50	0	24,4 + 0,0127 × (Abs. stroke + (nc - 1) × A) + 19,00 × (nc - 1)	0,70 + 0,70 × (nc - 1)
		2	25,5 + 0,0127 × (Abs. stroke + (nc - 1) × A) + 19,00 × (nc - 1)	0,97 + 0,70 × (nc - 1)
		4 / 6 / 8 / 10	27,1 + 0,6 * (n_{SA} - 4) + 0,0127 × (Abs. stroke + (nc - 1) × A) + 19,00 × (nc - 1)	1,50 + 0,135 * (n_{SA} - 4) + 0,70 × (nc - 1)

*Absolute stroke [mm]
A - Distance between carriages [mm]. More info on following pages.
nc - Number of carriages

**The stated values are for strokes (and for distances between the carriages A) up to 500mm.
No Load Torque value increases with stroke (and with A) elongation.

Mass calculation doesn´t include mass of motor, reduction gear, switches and clamps.

Planar moment of inertia

Linear Unit	Planar moment of inertia	
	I_y [cm^4]	I_z [cm^4]
MTV 80 MTV 80 2LR	144,1	192,3

In order to improve the products in this catalogue the specifications are subject to change without notice.

TECHNICAL DATA

Deflection of the linear unit

Fixed - fixed mounting

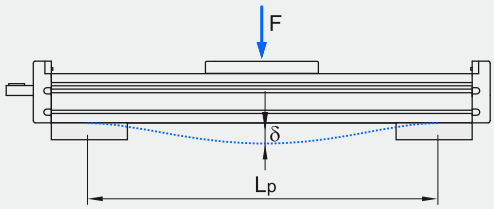

Fixed - free mounting

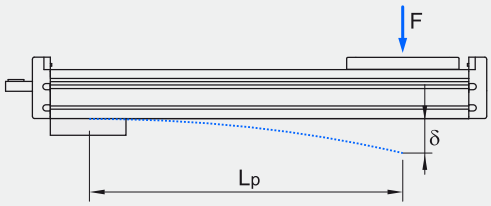

δ Maximum deflection of the linear unit [mm]
δmax Maximum permissible deflection of the linear unit [mm]
F Applied force [N]
Lp Unsupported profile length [mm]

The maximum permissible deflection δmax must not be exceeded. In the case that maximum deflection δ exceeds the maximum permissible deflection δmax additional profile supports are needed.

MTV 80

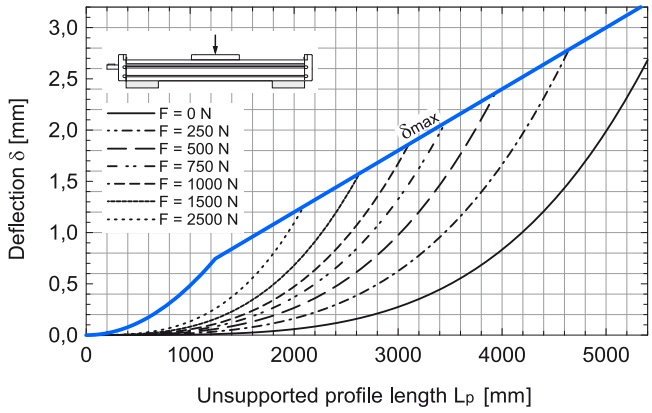

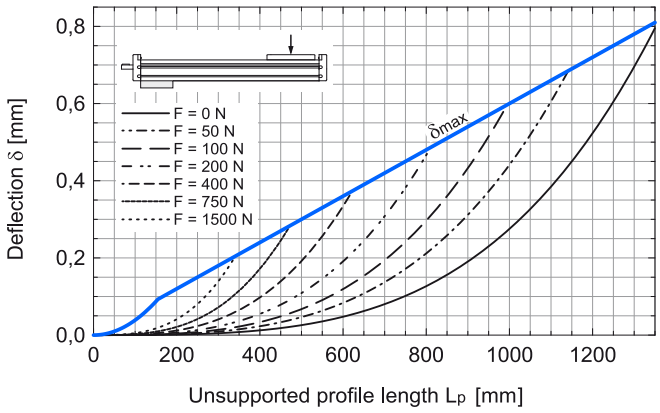

Maximum travel speed as a function of the profile length (Vmax - L curves)

MTV 80

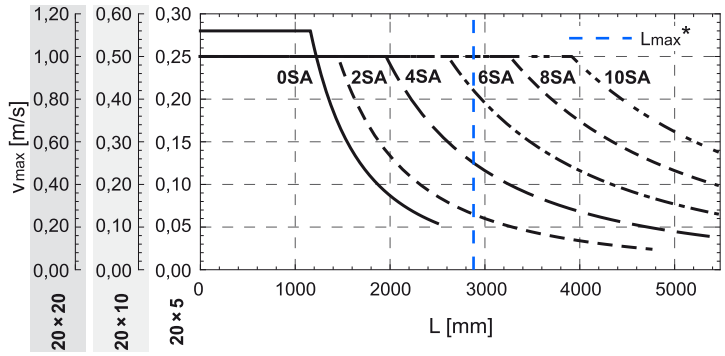

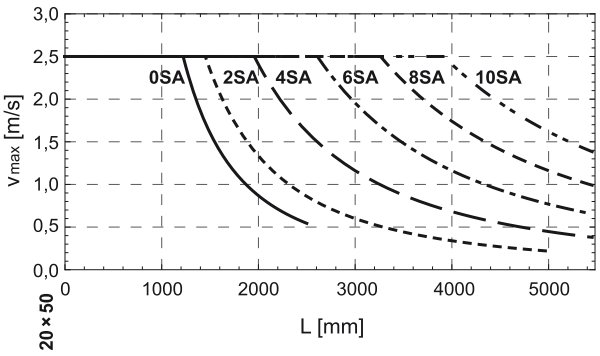

* Max. length Lmax of MTV 80 linear unit with 20x10 ball screw.

TECHNICAL DATA

Deflection of the 2LR version

Fixed - fixed mounting

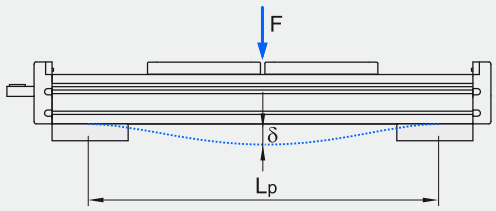

δ Maximum deflection of the linear unit [mm]
δmax Maximum permissible deflection of the linear unit [mm]
F Applied force [N]
Lp Unsupported profile length [mm]

The maximum permissible deflection δmax must not be exceeded. In the case that maximum deflection δ exceeds the maximum permissible deflection δmax additional profile supports are needed.

MTV 80 2LR

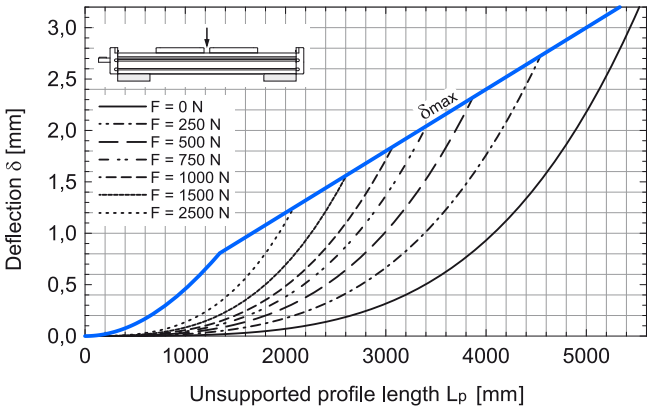

Maximum travel speed as a function of the profile length (Vmax - L curves)

MTV 80 2LR

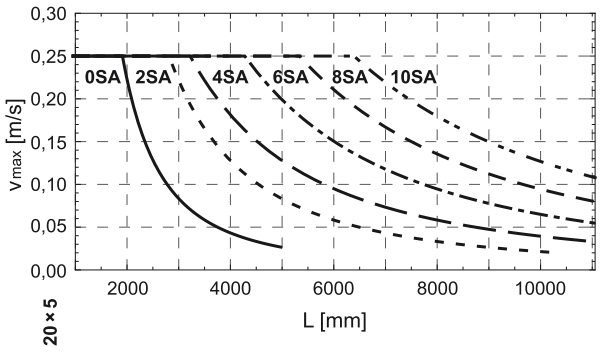

In order to improve the products in this catalogue the specifications are subject to change without notice.

DIMENSIONS

Linear Unit doesn't include any safety
Absolute stroke = Effective stroke + 2 x Safety stroke stroke.

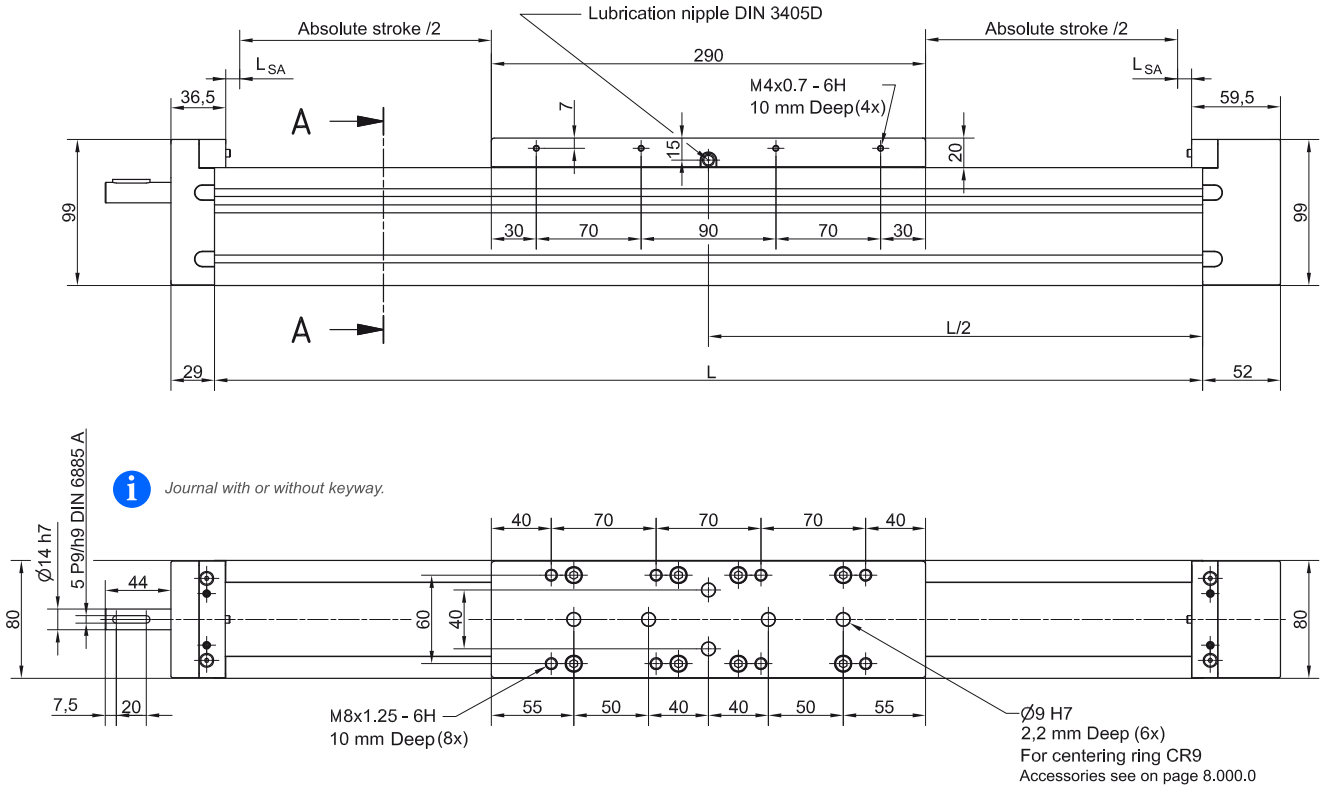

n_{SA}	L_{SA}
0	6,0
2SA	28,5
4SA	59,5
6SA	90,5
8SA	121,5
10SA	152,5

L_{SA} Additional length [mm]

All dimensions in mm;
Drawings scales are not equal.

2LR Version

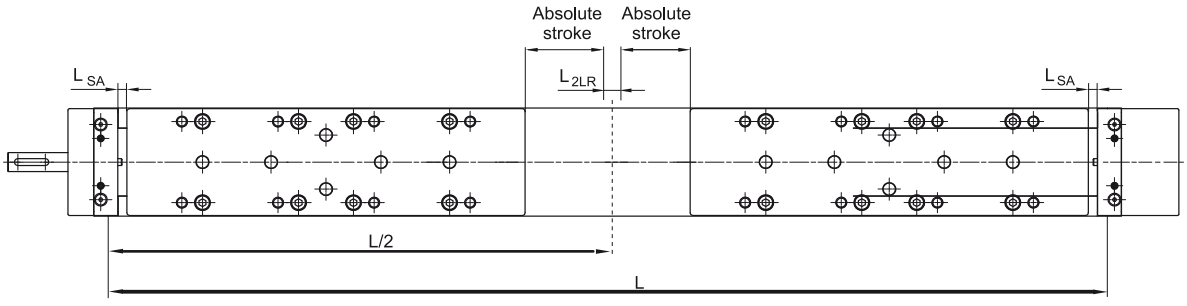

n_{SA}	L_{SA}	L_{2LR}
0	6,0	0,0
2SA	28,5	48,0
4SA	59,5	110,0
6SA	90,5	172,0
8SA	121,5	234,0
10SA	152,5	296,0

L_{SA} Additional length [mm]
L_{2LR} Min. distance between carriages [mm]

DIMENSIONS

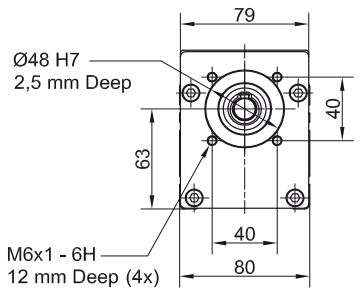

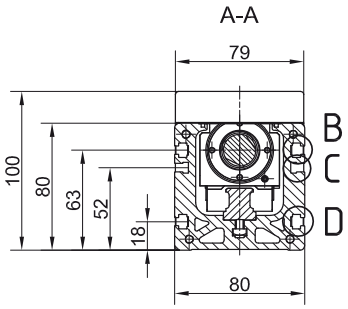

All dimensions in mm.
Drawings scales are not equal.

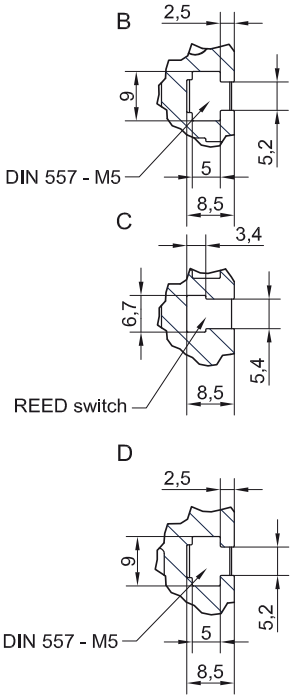

OPTIONAL:

TAP / PIN holes available on request.

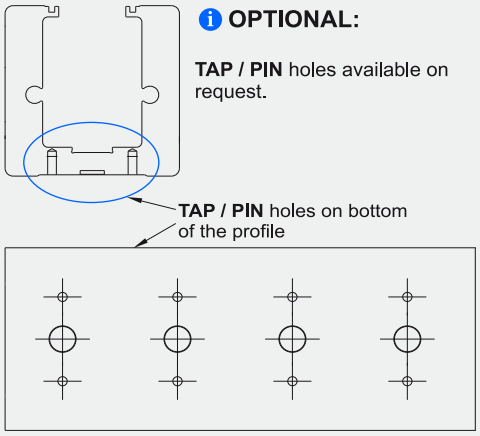

Drawing only for presentational use.

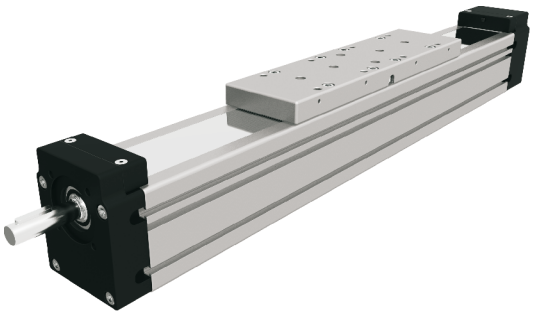

Mounting the drive

- by the **MOTOR SIDE DRIVE - MSD** *(Page 7.095.0)*
- by the **MOTOR ADAPTER WITH COUPLING** *(Page 8.020.0)*

Available on request.

Defining of the linear unit length

Standard version

L = Effective stroke + 2 × Safety stroke + Lv + 2 × LSA + A × (nc - 1) + 15 mm

Ltotal = L + 81 mm, Lv = 290 mm

Left side (L)

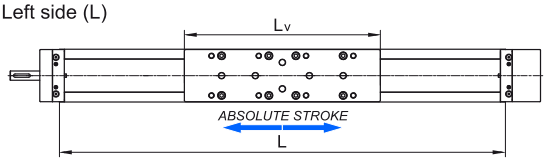

Right side (R)

Multiple carriages

A ≥ Lv *Connection between the carriages must be provided by the customer*

nc - Number of carriages

2LR version

L = 2 × (Effective stroke + 2 × Safety stroke) + 2 × Lv + 2 × LSA + L2LR + A × (nc - 1) + 15 mm

Ltotal = L + 81 mm, Lv = 290 mm

Left side (L)

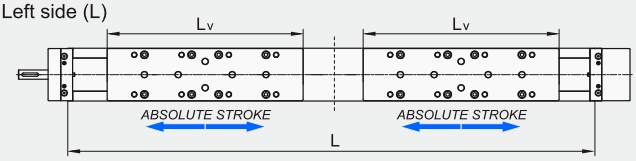

Right side (R)

Multiple carriages

A ≥ Lv *Connection between the carriages must be provided by the customer*

nc - Number of carriages

In order to improve the products in this catalogue the specifications are subject to change without notice.

TECHNICAL DATA

General technical data

Linear Unit	Carriage length Lv [mm]	Dynamic Load capacity C [N]	Dynamic moment Mx [Nm]	My [Nm]	Mz [Nm]	Max. permissible loads Forces Fpy [N]	Fpz [N]	Moments Mpx [Nm]	Mpy [Nm]	Mpz [Nm]	* Max. length Lmax [mm]	* Max. stroke [mm]
MTV 110	330	49600	630	2650	2650	10000	20260	295	670	535	5850	5456

*For lengths / stroke over the stated value in the table above please contact us.
Values for max. stroke are not valid for multiple carriages and screw support SA
(equation of defining the linear unit length for particular size of the linear unit needs to be used).

Operating conditions	
Operating temp.	0°C ~ +60°C
Duty cycle	100%

For operating temperature out of the presented range, please contact us.

Recommended values of loads:

All the data of dynamic moments and load capacities stated in the upper table are theoretical without considering any safety factor. The safety factor depends on the application and its requested safety. We recommend a minimum safety factor (fs =5.0)

Modulus of elasticity

$E = 70000\ N / mm^2$

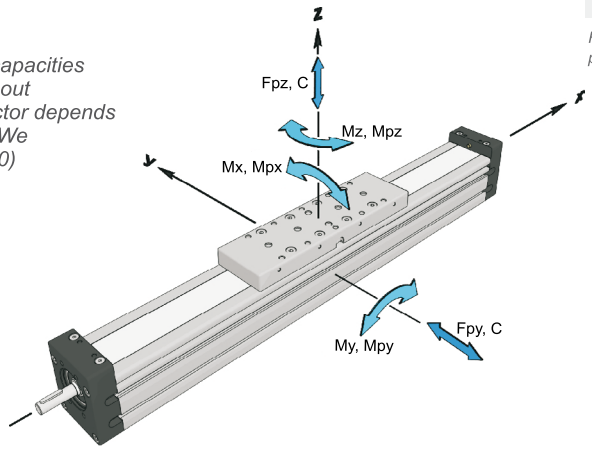

General technical data for double carriage

Linear Unit	Number of carriages	Dynamic Load capacity C [N]	* Dynamic moment Mx [Nm]	My [Nm]	Mz [Nm]	* Max. permissible loads Forces Fpy [N]	Fpz [N]	Moments Mpx [Nm]	Mpy [Nm]	Mpz [Nm]
MTV 110	2	99200	1260	49,6 × A	49,6 × A	20000	40500	590	20,3 × A	10,0 × A

A - Distance between carriages [mm]. More info on following pages.

Presented values are for informational purposes only. Exact values can be calculated using our sizing selection tool on Unimotion web site.

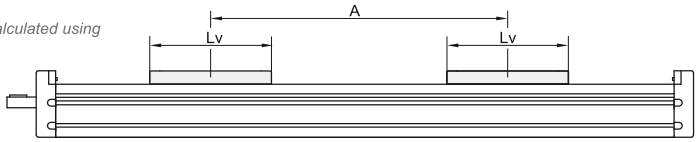

Ball Screw Drive data

Linear Unit	Ball screw [d × l]	3 Max. rotational speed (Without SA) [rev / min]	1 Max. travel speed (Without SA) [m / s]	Lead constant [mm / rev]	2 Max. Repeatability precision [mm] STANDARD ISO7	ISO5	Dynamic load capacity BS Ca [N]	Max. axial load Fx [N]	Max. drive torque Ma [Nm]	4 Min. stroke [mm]	1 Max. acceleration [m/s²]
MTV 110	32 × 5	2150	0,18	5	± 0,02	± 0,01	18850	18850	16,7 with Keyway 16,7 without Keyway	65	20
	32 × 10	3000	0,50	10	± 0,02	± 0,01	37000	29600	27,3 with Keyway 52,3 without Keyway		
	32 × 20		1,00	20	± 0,02	± 0,01	22950	14800			
	32 × 32		1,60	32	± 0,02	± 0,01	15500	9240		70	

[1] *Max. travel speed depends of the length of the linear unit, see diagram for particular size of the linear unit. For travel speed and acceleration over the stated value in the table above or diagrams please contact us.*

[2] *For the ball nut with the preload of 2%, please contact us.*

[3] *With SA the max. rotation speed is limited to 3000 rev / min.*

[4] *For minimum stroke below the stated value in the table above please contact us.*

Planar moment of inertia

Linear Unit	Planar moment of inertia Iy [cm^4]	Iz [cm^4]
MTV 110	562,0	669,0

TECHNICAL DATA

Mass, moved mass, mass moment of inertia and no load torque

Linear Unit	Ball screw [d × l]	Number of SA n_{SA}	* Mass of linear unit [kg]	* Moved mass [kg]
MTV 110	32 × 5	0	17,3 + 0,0216 × (Abs. stroke + (nc - 1) × A) + 4,9 × (nc - 1)	4,90 + 4,90 × (nc - 1)
		2	17,7 + 0,0216 × (Abs. stroke + (nc - 1) × A) + 4,9 × (nc - 1)	5,03 + 4,90 × (nc - 1)
		4 / 6 / 8 / 10	19,3 + 0,8 * (n_{SA} - 4) + 0,0216 × (Abs. stroke + (nc - 1) × A) + 4,9 × (nc - 1)	5,29 + 0,065 * (n_{SA} - 4) + 4,90 × (nc - 1)
	32 × 10	0	17,3 + 0,0216 × (Abs. stroke + (nc - 1) × A) + 4,9 × (nc - 1)	4,90 + 4,90 × (nc - 1)
		2	17,7 + 0,0216 × (Abs. stroke + (nc - 1) × A) + 4,9 × (nc - 1)	5,03 + 4,90 × (nc - 1)
		4 / 6 / 8 / 10	19,3 + 0,8 * (n_{SA} - 4) + 0,0216 × (Abs. stroke + (nc - 1) × A) + 4,9 × (nc - 1)	5,29 + 0,065 * (n_{SA} - 4) + 4,90 × (nc - 1)
	32 × 20	0	17,3 + 0,0216 × (Abs. stroke + (nc - 1) × A) + 4,9 × (nc - 1)	4,90 + 4,90 × (nc - 1)
		2	17,7 + 0,0216 × (Abs. stroke + (nc - 1) × A) + 4,9 × (nc - 1)	5,03 + 4,90 × (nc - 1)
		4 / 6 / 8 / 10	19,3 + 0,8 * (n_{SA} - 4) + 0,0216 × (Abs. stroke + (nc - 1) × A) + 4,9 × (nc - 1)	5,29 + 0,065 * (n_{SA} - 4) + 4,90 × (nc - 1)
	32 × 32	0	17,3 + 0,0216 × (Abs. stroke + (nc - 1) × A) + 4,9 × (nc - 1)	4,90 + 4,90 × (nc - 1)
		2	17,7 + 0,0216 × (Abs. stroke + (nc - 1) × A) + 4,9 × (nc - 1)	5,03 + 4,90 × (nc - 1)
		4 / 6 / 8 / 10	19,3 + 0,8 * (n_{SA} - 4) + 0,0216 × (Abs. stroke + (nc - 1) × A) + 4,9 × (nc - 1)	5,29 + 0,065 * (n_{SA} - 4) + 4,90 × (nc - 1)

Linear Unit	Ball screw [d × l]	Number of SA n_{SA}	* Mass moment of inertia [10^{-5} kg m^2]	** No load torque [Nm]
MTV 110	32 × 5	0	34,6 + 0,0690 × (Abs. stroke + (nc - 1) × A) + 0,31 × (nc - 1)	0,60 + 0,60 × (nc - 1)
		2	35,1 + 0,0690 × (Abs. stroke + (nc - 1) × A) + 0,31 × (nc - 1)	0,67 + 0,60 × (nc - 1)
		4 / 6 / 8 / 10	39,4 + 2,2 * (n_{SA} - 4) + 0,0690 × (Abs. stroke + (nc - 1) × A) + 0,31 × (nc - 1)	0,81 + 0,035 * (n_{SA} - 4) + 0,60 × (nc - 1)
	32 × 10	0	35,5 + 0,0690 × (Abs. stroke + (nc - 1) × A) + 1,24 × (nc - 1)	0,70 + 0,70 × (nc - 1)
		2	36,1 + 0,0690 × (Abs. stroke + (nc - 1) × A) + 1,24 × (nc - 1)	0,84 + 0,70 × (nc - 1)
		4 / 6 / 8 / 10	40,4 + 2,2 * (n_{SA} - 4) + 0,0690 × (Abs. stroke + (nc - 1) × A) + 1,24 × (nc - 1)	1,12 + 0,070 * (n_{SA} - 4) + 0,70 × (nc - 1)
	32 × 20	0	39,3 + 0,0690 × (Abs. stroke + (nc - 1) × A) + 4,96 × (nc - 1)	0,75 + 0,75 × (nc - 1)
		2	39,9 + 0,0690 × (Abs. stroke + (nc - 1) × A) + 4,96 × (nc - 1)	1,03 + 0,75 × (nc - 1)
		4 / 6 / 8 / 10	44,4 + 2,2 * (n_{SA} - 4) + 0,0690 × (Abs. stroke + (nc - 1) × A) + 4,96 × (nc - 1)	1,60 + 0,140 * (n_{SA} - 4) + 0,75 × (nc - 1)
	32 × 32	0	47,0 + 0,0690 × (Abs. stroke + (nc - 1) × A) + 12,71 × (nc - 1)	0,80 + 0,80 × (nc - 1)
		2	47,8 + 0,0690 × (Abs. stroke + (nc - 1) × A) + 12,71 × (nc - 1)	1,25 + 0,80 × (nc - 1)
		4 / 6 / 8 / 10	52,8 + 2,3 * (n_{SA} - 4) + 0,0690 × (Abs. stroke + (nc - 1) × A) + 12,71 × (nc - 1)	2,16 + 0,225 * (n_{SA} - 4) + 0,80 × (nc - 1)

Absolute stroke [mm]
A - Distance between carriages [mm]. More info on following pages.
nc - Number of carriages

Mass calculation doesn´t include mass of motor, reduction gear, switches and clamps.

**The stated values are for strokes (and for distances between the carriages A) up to 500mm.
No Load Torque value increases with stroke (and with A) elongation.

Deflection of the linear unit

Fixed - fixed mounting

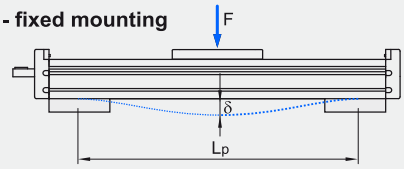

Fixed - free mounting

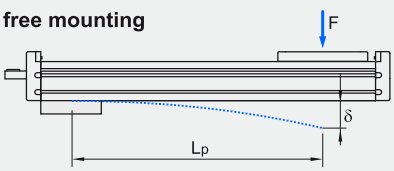

δ Maximum deflection of the linear unit [mm]
δmax Maximum permissible deflection of the linear unit [mm]
F Applied force [N]
Lp Unsupported profile length [mm]

The maximum permissible deflection δmax must not be exceeded. In the case that maximum deflection δ exceeds the maximum permissible deflection δmax additional profile supports are needed.

MTV 110

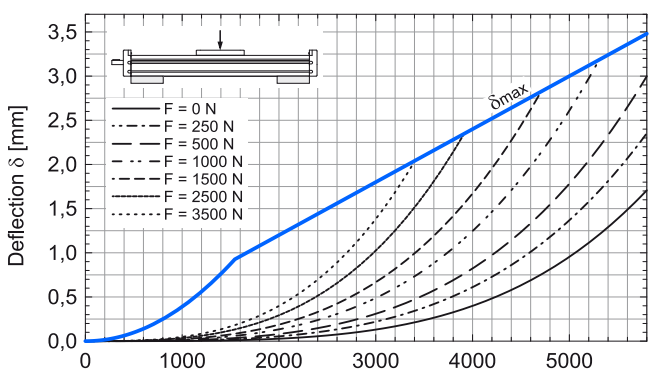

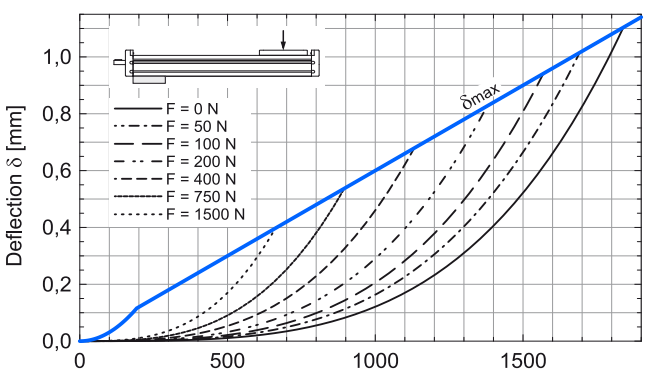

In order to improve the products in this catalogue the specifications are subject to change without notice.

DIMENSIONS

Linear Unit doesn't include any safety
Absolute stroke = Effective stroke + 2 x Safety stroke stroke.

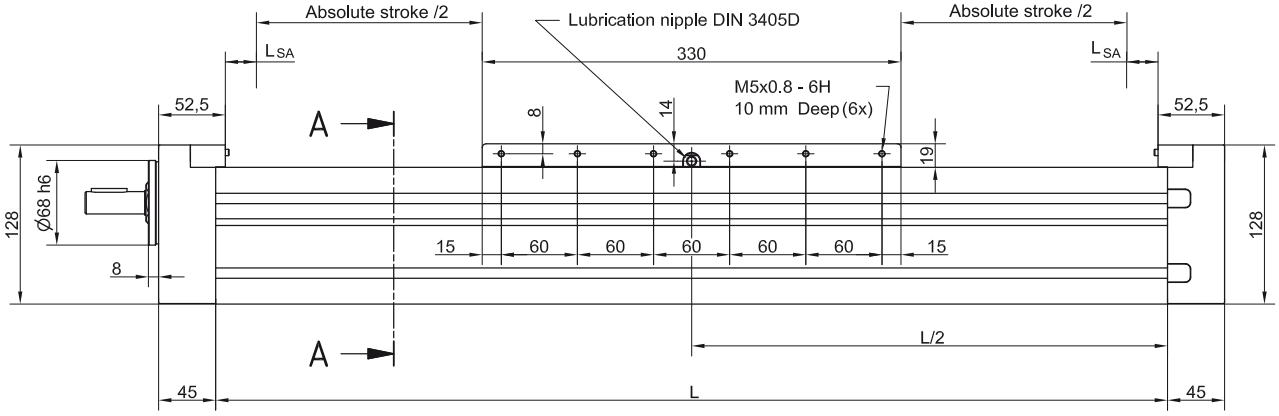

Journal with or without keyway.

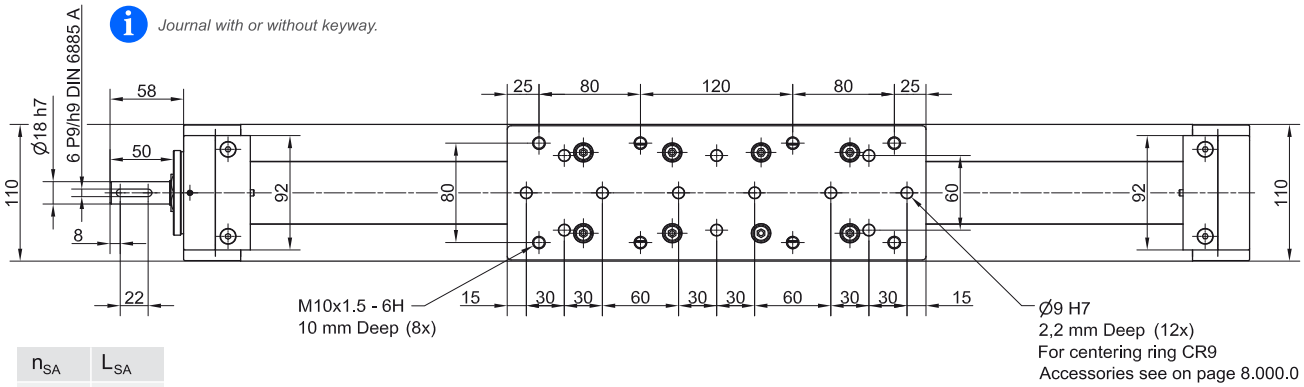

Accessories see on page 8.000.0

n_{SA}	L_{SA}
0	24,5
2SA	28,0
4SA	59,0
6SA	90,0
8SA	121,0
10SA	152,0

All dimensions in mm;
Drawings scales are not equal.

L_{SA} Additional length [mm]

Defining of the linear unit length

L = Effective stroke + 2 × Safety stroke + Lv + 2 × L_{SA} + A × (n_c - 1) + 15 mm

Ltotal = L + 90 mm, Lv = 330 mm

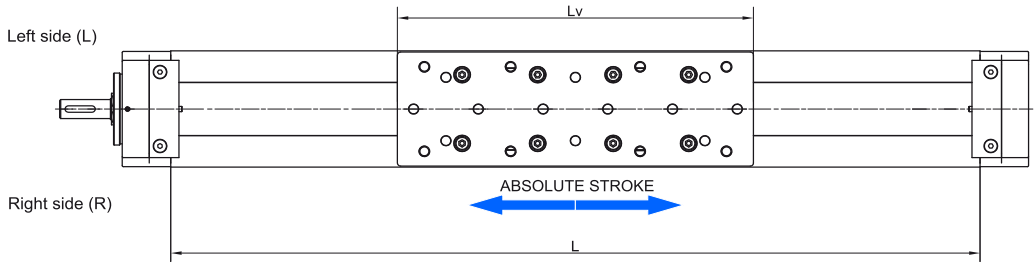

Multiple carriages



A ≥ Lv *Connection between the carriages must be provided by the customer*

n_c - Number of carriages

DIMENSIONS

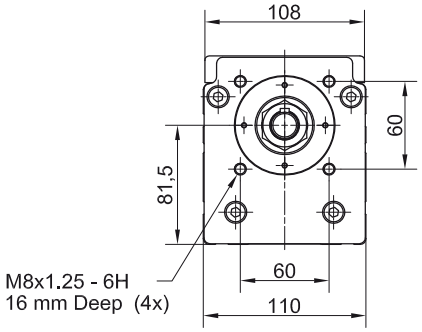

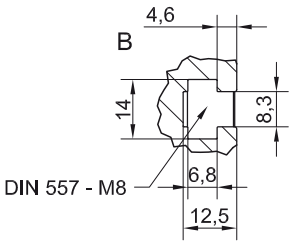

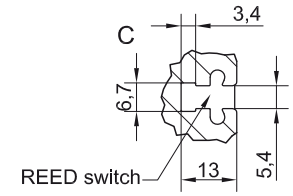

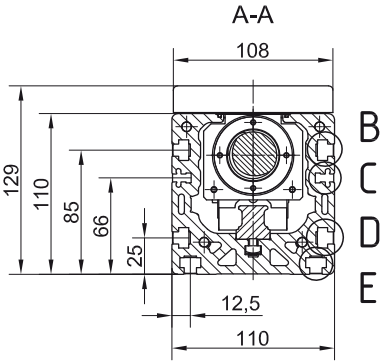

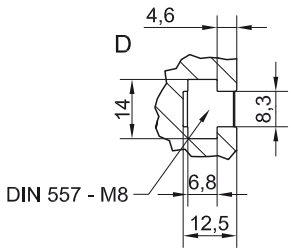

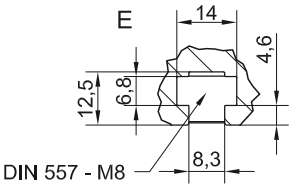

All dimensions in mm.
Drawings scales are not equal.

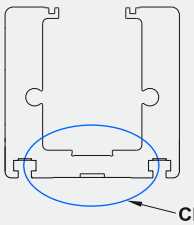

OPTIONAL:

CENTER RING holes available on request.

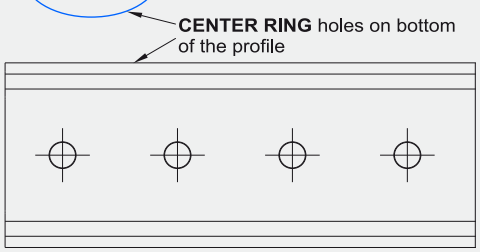

Drawing only for presentational use.



Mounting the drive

- by the **MOTOR SIDE DRIVE - MSD** *(Page 7.095.0)*
- by the **MOTOR ADAPTER WITH COUPLING** *(Page 8.020.0)*

Available on request.

Maximum travel speed as a function of the profile length (Vmax - L curves)

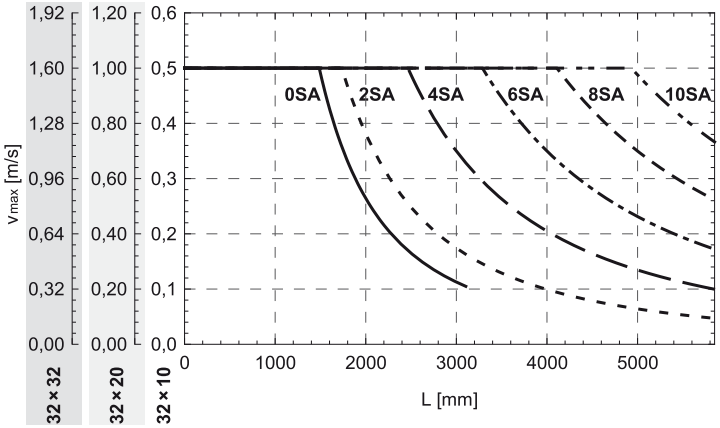

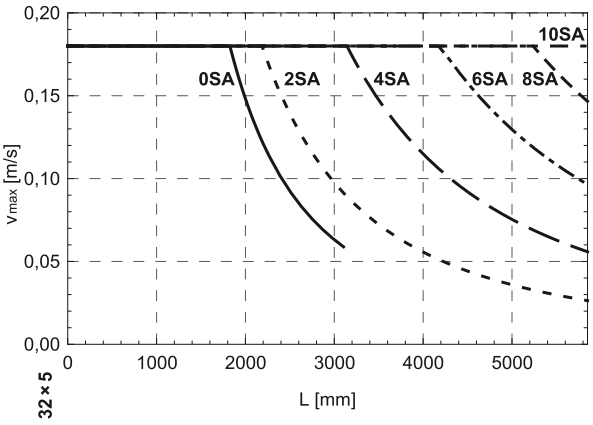

In order to improve the products in this catalogue the specifications are subject to change without notice.

MTJ ECO

CHARACTERISTICS

The **MTJ ECO** series Linear Unit is a powerful and cost-effective Linear Unit with toothed belt drive and a Zero-backlash Ball rail guide system for easy and accurate linear movements.
It can easily be combined to multi-axis systems.
Excellent price-/performance ratio and quick delivery time are ensured.
An extruded aluminum Profile from 6063 AL with on it mounted Zero-backlash Ball rail guide system, allows high load capacities and optimal cycles for the movement of larger masses at high speed.
The linear unit MTJ ECO uses a pre-tensioned steel reinforced AT polyurethane timing toothed belt. In conjunction with a Zero-backlash drive pulley high moments with alternating loads with good positioning accuracy, low wear and low noise can be realized.
The aluminum Profile includes T-slots for fixing the Linear Unit and for attaching sensors and switches .
Different carriage lengths of the Linear Unit allow the possibility to attach additional accessories on the side.
Lubrication holes on the carriage allow easy re-lubrication of the Ball rail guide .
For the linear unit MTJ ECO various adaptation options, for attaching (or redirecting), for Motors or Gearboxes are available.

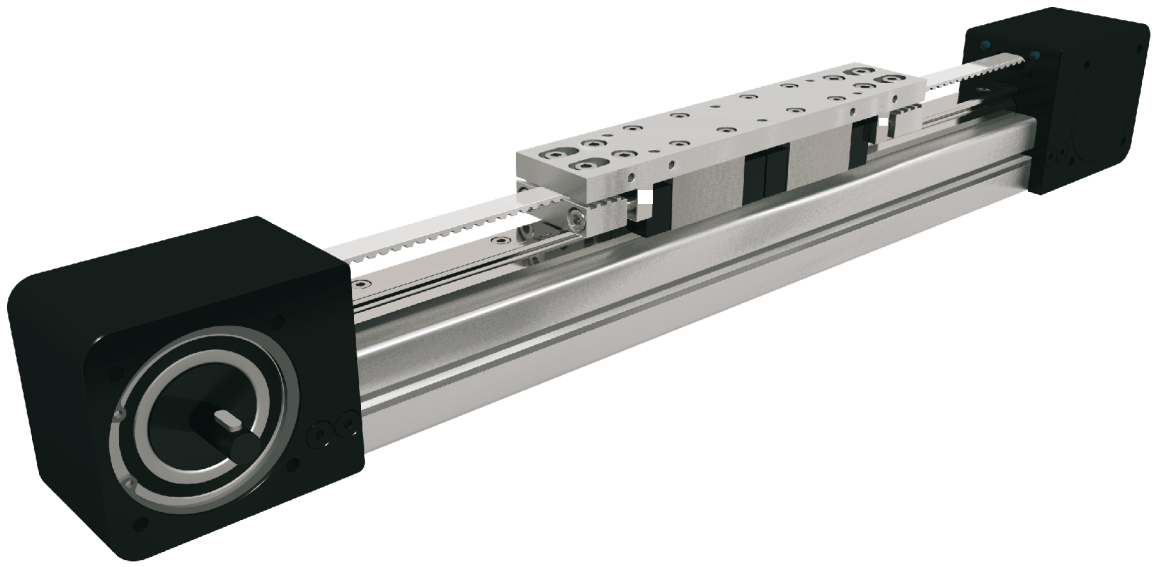

The aluminium profiles are manufactured according to the medium EN 12020-2 standard

Straightness = 0,35 mm/m; Max. torsion = 0,35 mm/m; Angular torsion = 0,2 mm/40 mm; Parallelism = 0,2 mm

In order to improve the products in this catalogue the specifications are subject to change without notice.

STRUCTURAL DESIGN

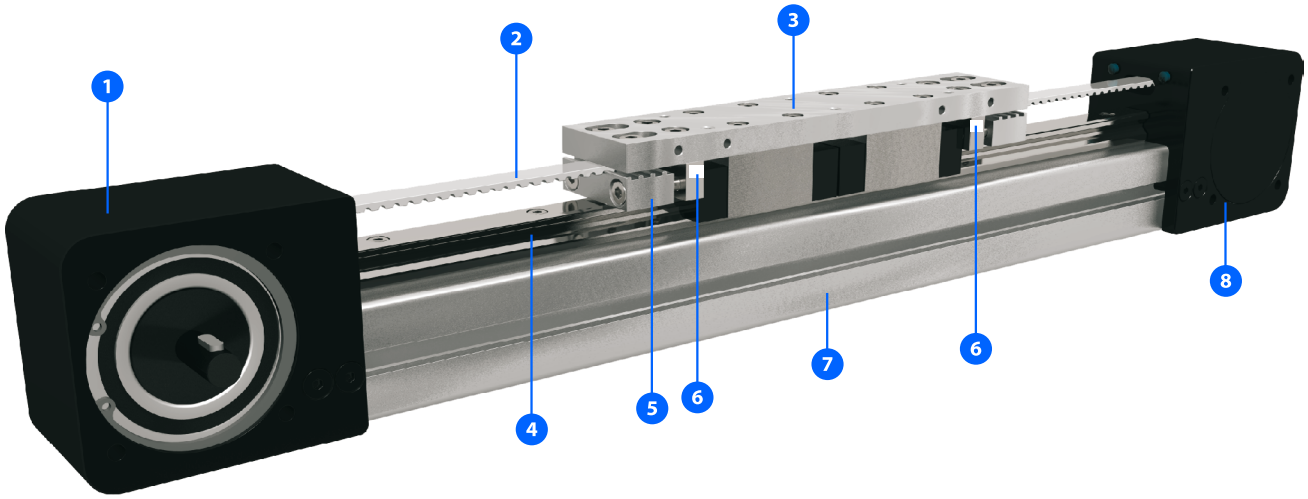

1 - Drive block with pulley
2 - AT polyurethane toothed belt with steel tension cords
3 - Carriage
4 - Linear Ball Guideway
5 - Belt Tensioning system
6 - Lubrication port
7 - Aluminium profile-Hard anodized
8 - End block

HOW TO ORDER



Series :

MTJ

Size :

40

Type :

ECO

Absolute stroke [mm] :
(Absolute stroke = Effective stroke + 2 x Safety stroke)

Carriage Version :

S : Short

L : Long

Number of carriages :

The stated number specifies the number of carriages on one Linear unit (up to 5 carriages avaliable)

Leave blank : For the case of one carriage

Distance between two carriages [mm] :

Leave blank : For the case of one carriage

Type of drive pulley :

0 : Pulley with through hole

1 : Pulley with journal

10 : Pulley with journal (without Keyway)

2 : Pulley with journal on both sides

20 : Pulley with journal on both sides (without Keyway)

3 : Without drive unit

Drive journal position :

L : Journal on left side

R : Journal on right side

Leave blank : For type of drive pulley 0, 2, 20 and 3

In order to improve the products in this catalogue the specifications are subject to change without notice.

TECHNICAL DATA

General technical data

Linear Unit	Carriage length	Dynamic load capacity	Dynamic moment			Max. permissible loads					Moved mass	Max. Repeatability	* Max. length	* Max. stroke	** Min. stroke
						Forces		Moments							
	Lv [mm]	C [N]	Mx [Nm]	My [Nm]	Mz [Nm]	Fpy [N]	Fpz [N]	Mpx [Nm]	Mpy [Nm]	Mpz [Nm]	[kg]	[mm]	Lmax [mm]	[mm]	[mm]
MTJ 40 ECO S	132	9900	79	59	59	3270	5100	34	34	34	0,45	± 0,1	5960	5813	40
MTJ 40 ECO L	200	19800	158	660	660	6540	10190	60	341	219	0,72	± 0,1		5745	40

*For lengths / stroke over the stated value in the table above please contact us.
Values for max. stroke are not valid for multiple carriages
(equation of defining the linear unit length for particular size of the linear unit needs to be used).

**For minimum stroke below the stated value in the table above please contact us.

Operating conditions	
Operating temp.	0°C ~ +60°C
Duty cycle	100%

For operating temperature out of the presented range, please contact us.

Recommended values of loads

All the data of dynamic moments and load capacities stated in the upper table are theoretical without considering any safety factor. The safety factor depends on the application and its requested safety.
We recommend a minimum safety factor (fs =5.0)

Modulus of elasticity

E = 70000 N / mm^2

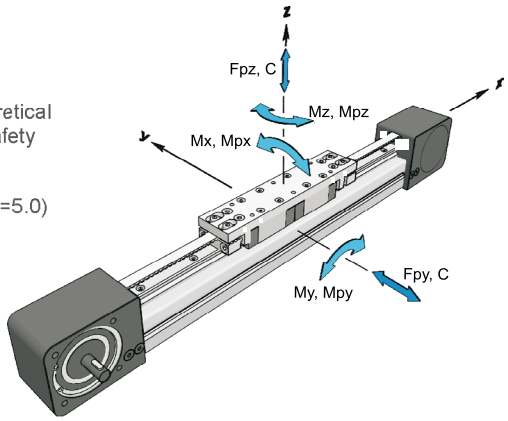

General technical data for double carriage

Linear Unit	Carriage version	Dynamic load capacity	* Dynamic moment			* Max. permissible loads				
						Forces		Moments		
		C [N]	Mx [Nm]	My [Nm]	Mz [Nm]	Fpy [N]	Fpz [N]	Mpx [Nm]	Mpy [Nm]	Mpz [Nm]
MTJ 40 ECO	S2	19800	158	9,9 × A	9,9 × A	6540	10190	68	5,1 × A	3,3 × A
	L2	39600	317	19,8 × A	19,8 × A	13080	20380	120	10,2 × A	6,5 × A

*A - Distance between carriages [mm]. More on page 4.030.0

Presented values are for informational purposes only. Exact values can be calculated using our sizing selection tool on Unimotion web site.

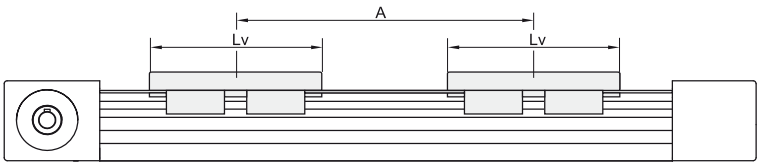

Drive and belt data

Linear Unit	**Max. travel speed	Max. drive torque	* No load torque	Puley drive ratio	Pulley diameter	Belt type	Belt width	Max. force transmited by belt	Specific spring constant C_{spec}	** Max. acceleration
	[m / s]	[Nm]	[Nm]	[mm / rev]	[mm]		[mm]	[N]	[N]	[m/s^2]
MTJ 40 ECO S	3	7,5	1,0 × nc	180	57,31	AT5	12	262	235000	70
MTJ 40 ECO L			1,1 × nc							

*The stated values are for strokes (and for distances between the carriages A) up to 500mm. No Load Torque value increases with stroke (and with A) elongation.
nc - Number of carriages

**For travel speed and acceleration over the stated value in the table above please contact us.

TECHNICAL DATA

Mass and mass moment of inertia

Linear Unit	Mass of linear unit [kg]	Mass moment of inertia [10^{-5} kg m^2]	Planar moment of inertia Iy [cm^4]	Iz [cm^4]
MTJ 40 ECO S	3,1 + 0,003 × (Abs. stroke + (nc - 1) × A) + 0,45 × (nc - 1)	70,1 + 0,007 × (Abs. stroke + (nc - 1) × A) + 36,9 × (nc - 1)	9,53	9,21
MTJ 40 ECO L	3,55 + 0,003 × (Abs. stroke + (nc - 1) × A) + 0,72 × (nc - 1)	92,3 + 0,007 × (Abs. stroke + (nc - 1) × A) + 59,1 × (nc - 1)		

**Absolute stroke [mm]*
A - Distance between carriages [mm]. More info on following pages.
nc - Number of carriages

Mass calculation doesn´t include mass of motor, reduction gear, switches and clamps.

Deflection of the linear unit

Fixed - fixed mounting

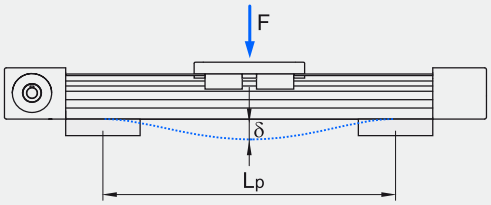

Fixed - free mounting

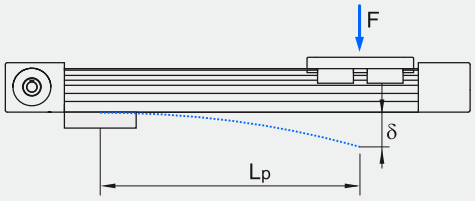

δ Maximum deflection of the linear unit [mm]
δmax Maximum permissible deflection of the linear unit [mm]
F Applied force [N]
Lp Unsupported profile length [mm]

The maximum permissible deflection δmax must not be exceeded. In the case that maximum deflection δ exceeds the maximum permissible deflection δmax additional profile supports are needed.

MTJ 40 ECO

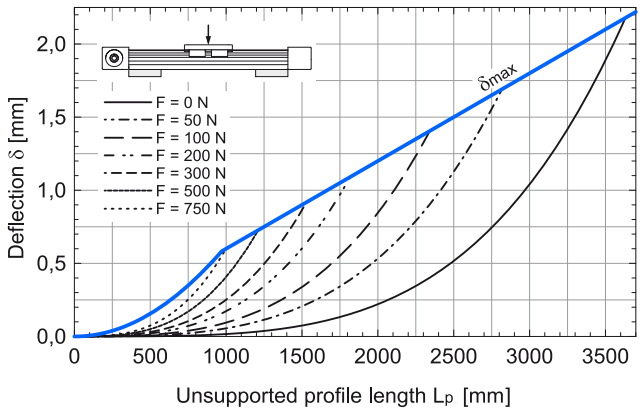

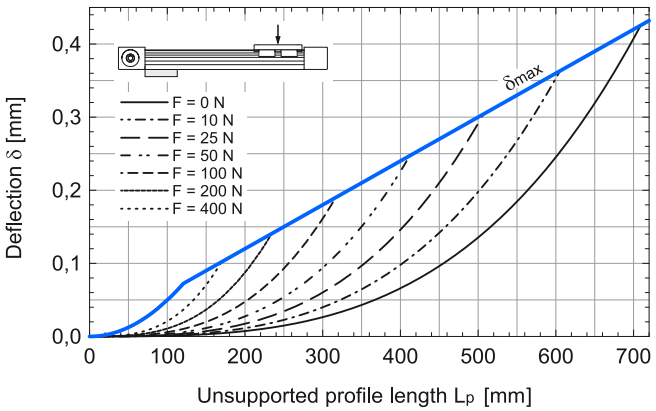

In order to improve the products in this catalogue the specifications are subject to change without notice.

DIMENSIONS

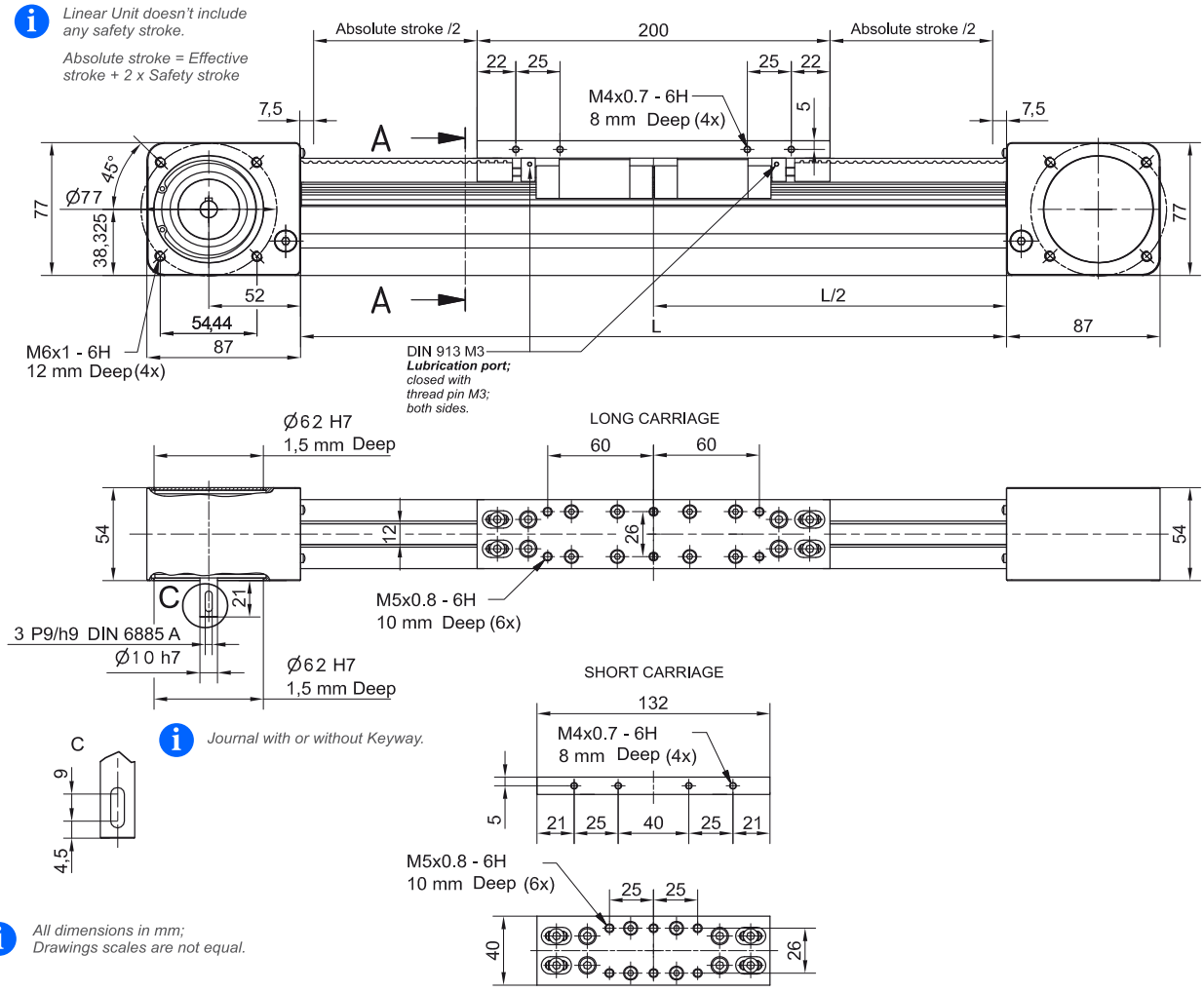

TYPE 0

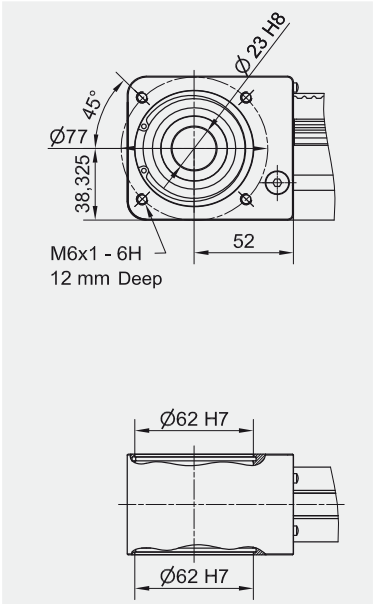

TYPE 1 L and 1 R

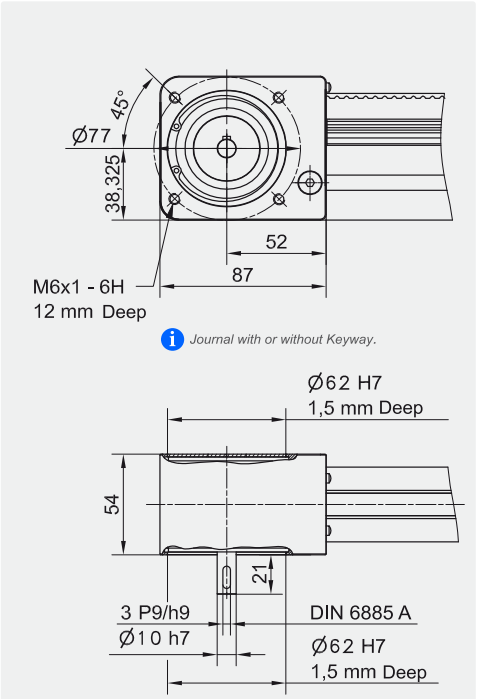

TYPE 2

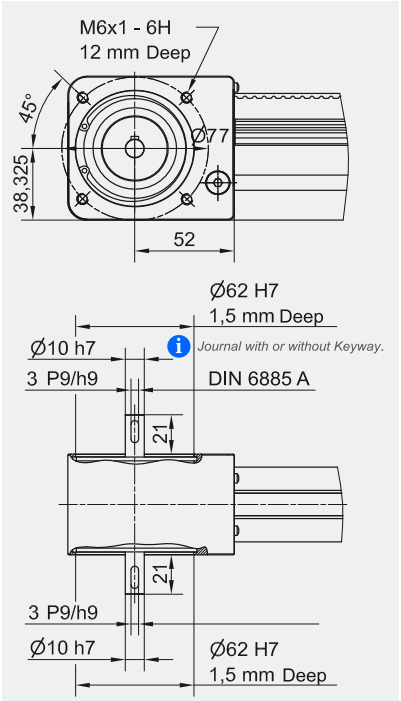

DIMENSIONS

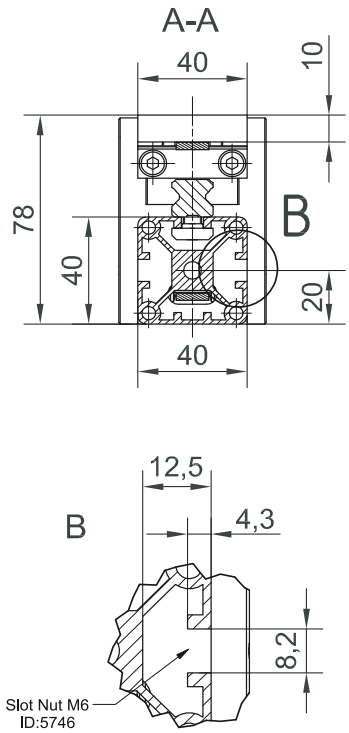

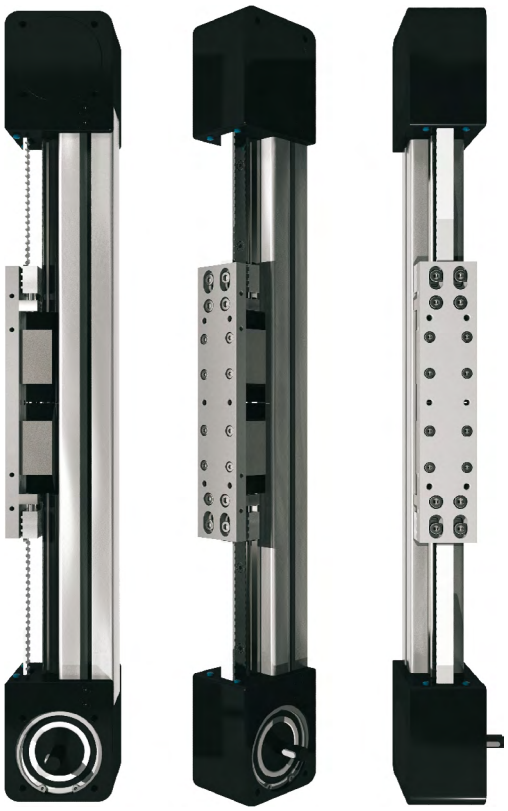

All dimensions in mm;
Drawings scales are not equal.

Mounting the drive

- by the **MOTOR ADAPTER WITH COUPLING** *(Page 8.020.0)*

Available on request.

Defining of the linear unit length

L = Effective stroke + 2 × Safety stroke + Lv + 15 mm

Ltotal = L + 174 mm

Lv - Long carriage = 200 mm

Lv - Short carriage = 132 mm

Left side (L)

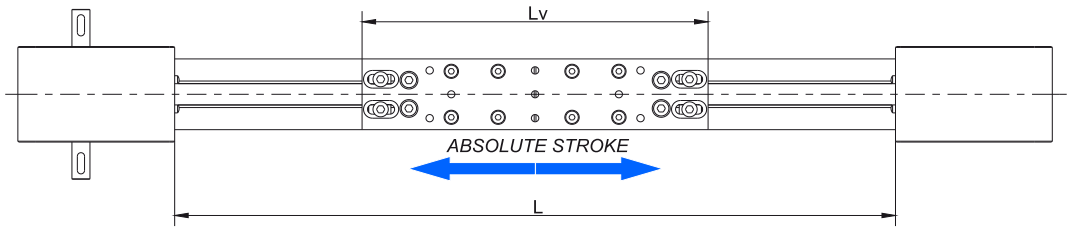

Right side (R)

Multiple Carriages

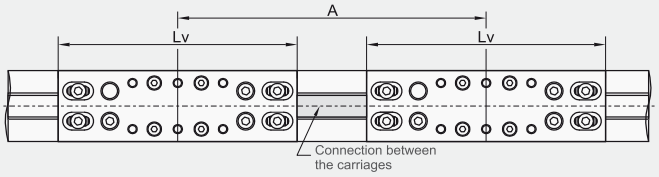

L = Effective stroke + 2 × Safety stroke + Lv + A × (nc - 1) + 15 mm

Ltotal = L + 174 mm

A ≥ Lv

For the case of A [mm] ≥ Alim :

- a toothed belt for the connection of the carriages will be used,
- the following condition must be met:
A [mm] = Alim + 5 × i,
where i ∈ {1,2,3,...}.

	MTJ 40 ECO S	MTJ 40 ECO L
Alim [mm]	132	200

In order to improve the products in this catalogue the specifications are subject to change without notice.

MTJZ

CHARACTERISTICS

The **MTJZ** series contains Z-axis Linear Units with toothed belt drive, integrated Ball rail system and compact dimensions. This Linear Units provide high performance features such as, high speed, good accuracy and repeatability by vertical applications.
They can easily be combined to multi-axis systems.
Excellent price-/performance ratio and quick delivery time are ensured.
The compact, precision-extruded aluminum Profile from 6063 AL with integrated Zero-backlash Ball rail guide system, allows high load capacities and optimal cycles for the movement of larger masses at high speed.
In the linear units MTJZ is used a pre-tensioned steel reinforced AT polyurethane timing toothed belt. In conjunction with a Zero-backlash drive pulley high moments with alternating loads with good positioning accuracy, low wear and low noise can be realized.
The in the Profile slot driving Polyurethane timing belt protects all the parts in the Profile from dust and other contaminations
The aluminum Profile includes T-slots for attaching sensors and switches. Also, a Reed switch can be used here.
The drive block provides the possibility to attach a Motor or Gearbox housing and additional accessories on it.
Central lubrication port on the drive block allows easy re-lubrication of the Ball rail guide.
For the linear units MTJZ various adaptation options, for attaching (or redirecting), for Motors or Gearboxes are available.

Multi drive blocks, which travel independently of each other, can be applied.

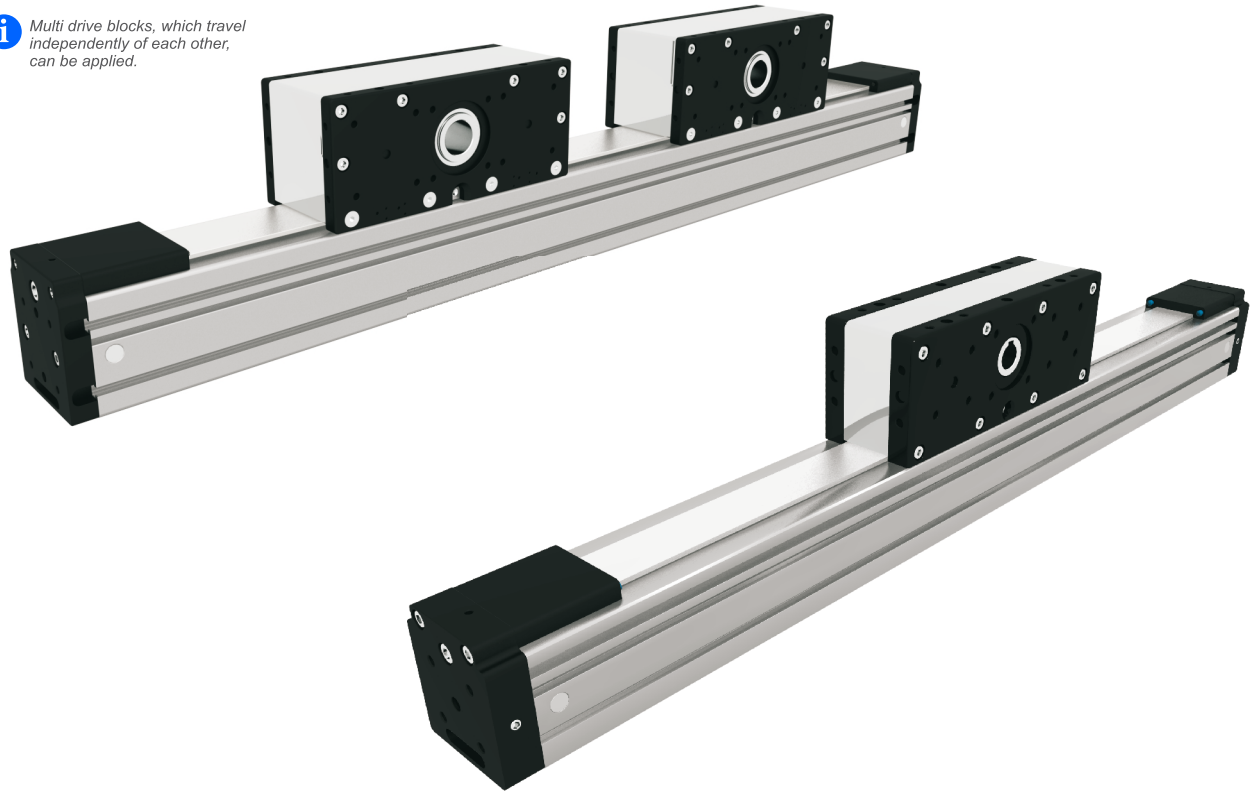

The aluminium profiles are manufactured according to the medium EN 12020-2 standard

Straightness = 0,35 mm/m; Max. torsion = 0,35 mm/m; Angular torsion = 0,2 mm/40 mm; Parallelism = 0,2 mm

In order to improve the products in this catalogue the specifications are subject to change without notice.

STRUCTURAL DESIGN

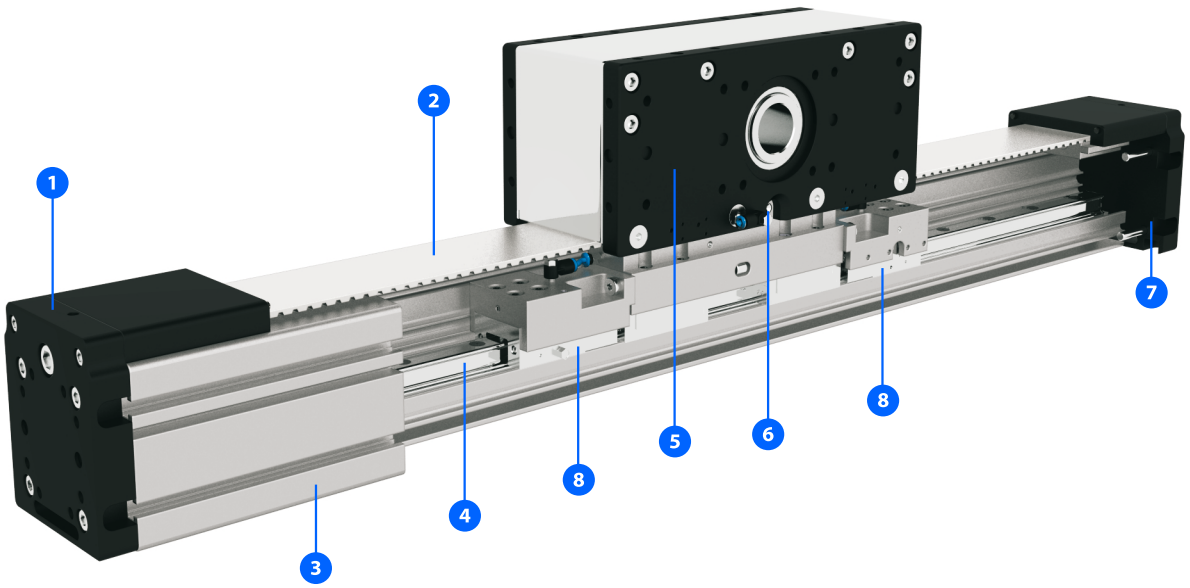

1 - Tension End with integrated belt tensioning system
2 - AT polyurethane toothed belt with steel tension cords
3 - Aluminium profile-Hard anodized
4 - Linear Ball Guideway
5 - Drive block with pulley, Motor flange; with built in Magnets
6 - Central lubrication port; both sides
7 - Tension End with integrated belt tensioning system
8 - Clamping and braking element for linear guideway

HOW TO ORDER



Series :

MTJZ

Size :

40

65

80

110

Absolute Stroke [mm] :
(Absolute stroke = Effective stroke + 2 x Safety stroke)

Type of drive pulley :

0 : Pulley with through hole

1 : Pulley with journal

10 : Pulley with journal (without Keyway)

2 : Pulley with journal on both sides

20 : Pulley with journal on both sides (without Keyway)

MTJZ 110 only available with drive pulley with through hole

Clamping element :

0 : Without

1 : With (available only for MTJZ 110)

Only as emergency break!

Number of drive blocks :

The stated number specifies the number of drive blocks on one Linear unit (up to 5 drive blocks avaliable)

Distance between two drive blocks [mm] :

Leave blank : For the case of one drive block

In order to improve the products in this catalogue the specifications are subject to change without notice.

TECHNICAL DATA

General technical data

Linear Unit	Drive block length Lv [mm]	Dynamic load capacity C [N]	Dynamic moment Mx [Nm]	My [Nm]	Mz [Nm]	Mass of drive block [kg]	Maximum Repeatability [mm]	[2] Max. length [3] (Version 1) Lmax [mm]	[2] Max. length [3] (Version 2) Lmax [mm]	[2] Max. Stroke [3] (Ver. 1) [mm]	[3] (Ver. 2) [mm]	[1] Min. Stroke [mm]
MTJZ 40	120	4610	28	120	120	0,95	±0,08	1000	3000	792	2792	25

[1] *For minimum stroke below the stated value in the table above please contact us.*

[2] *For lengths / stroke over the stated value in the table above please contact us.*
Values for max. stroke are not valid for multiple drive blocks
(equation of defining the linear unit length for particular size of the linear unit needs to be used).

Linear Unit	Max. permissible loads Forces Fpy [N]	Fpz [N]	Moments Mpx [Nm]	Mpy [Nm]	Mpz [Nm]
MTJZ 40	2320	1510	14	40	62

[3] ***Mounting versions***

Version 1: *Mounting by the drive block, profile travels*

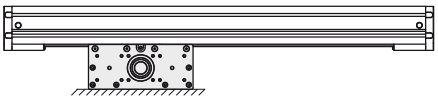

Version 2: *Mounting by the profile, drive blocks travel*

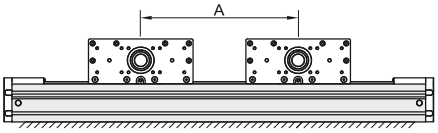

Multiple drive blocks, which travel independently of each other, can be applied.

Operating conditions	
Operating temp.	0°C ~ +60°C
Duty cycle	100%

For operating temperature out of the presented range, please contact us.

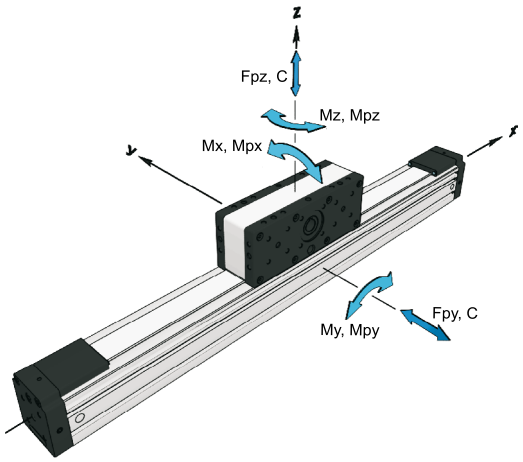

Recommended values of loads

All the data of dynamic moments and load capacities stated in the upper table are theoretical without considering any safety factor. The safety factor depends on the application and its requested safety. We recommend a minimum safety factor (fs =5.0)

Modulus of elasticity: *E = 70000 N / mm²*

Drive and belt data

Linear Unit	* Max. travel speed [m / s]	Max. drive torque [Nm]	No load torque of drive block [Nm]	Puley drive ratio [mm / rev]	Pulley diameter [mm]	Belt type	Belt width [mm]	Max. force transmited by belt [N]	Specific spring constant Cspec [N]	* Max. acceleration [m/s²]
MTJZ 40	5	3,6	0,2	99	31,51	AT3	20	230	225000	70

** For travel speed and acceleration over the stated value in the table above please contact us.*

Mass and planar moment of inertia

Linear Unit	* Mass of linear unit [kg]	Planar moment of inertia Iy [cm⁴]	Iz [cm⁴]
MTJZ 40	1,7 + 0,0023 × (Abs. stroke + (nb - 1) × A) + 0,95 × (nb - 1)	9,8	11,6

** Absolute stroke [mm]*
A - Distance between two drive blocks [mm]
nb - Number of drive blocks

Mass calculation doesn´t include mass of motor, reduction gear, switches and clamps.

TECHNICAL DATA

Mass moment of inertia

Linear Unit	* Mass moment of inertia *(Version 1)* [10^{-4} kg m^2]	Mass moment of inertia of drive block *(Version 2)* [10^{-4} kg m^2]
MTJZ 40	2,1 + 0,0058 × (Abs. stroke + (nb - 1) × A) + 0,22 × (nb - 1)	2,6

*Absolute stroke [mm]
A - Distance between two drive blocks [mm]
nb - Number of drive blocks

Deflection of the linear unit

Fixed - fixed mounting

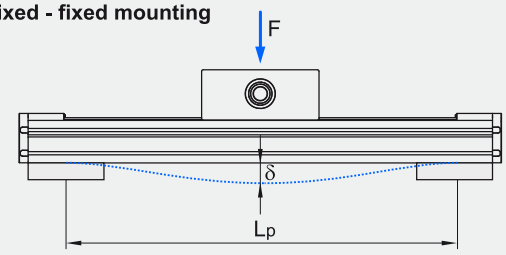

Fixed - free mounting

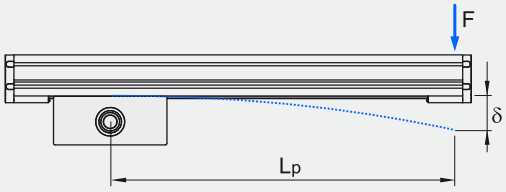

δ Maximum deflection of the linear unit [mm]
δmax Maximum permissible deflection of the linear unit [mm]
F Applied force [N]
Lp Unsupported profile length [mm]

The maximum permissible deflection δmax must not be exceeded. In the case that maximum deflection δ exceeds the maximum permissible deflection δmax additional profile supports are needed.

MTJZ 40

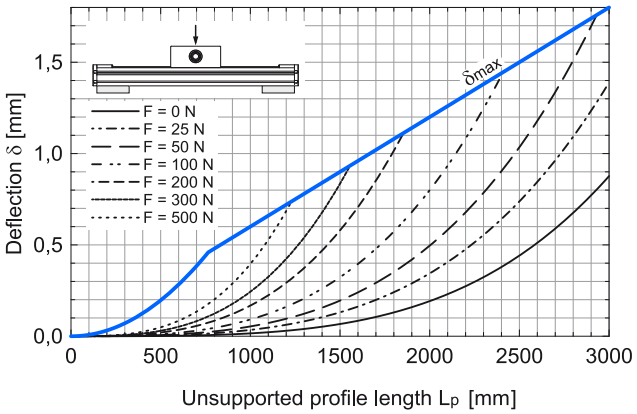

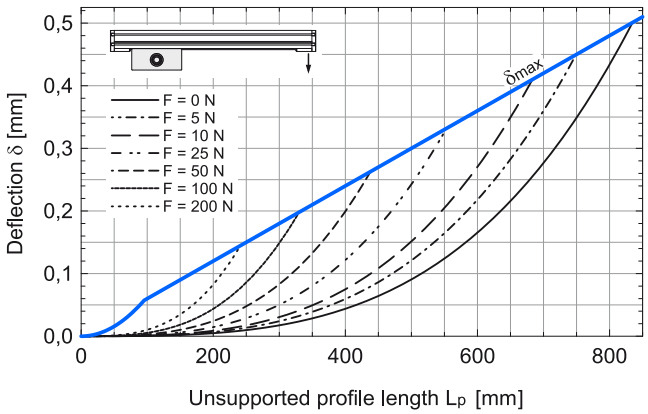

In order to improve the products in this catalogue the specifications are subject to change without notice.

DIMENSIONS

Linear Unit doesn't include any safety
Absolute stroke = Effective stroke + 2 x Safety stroke.

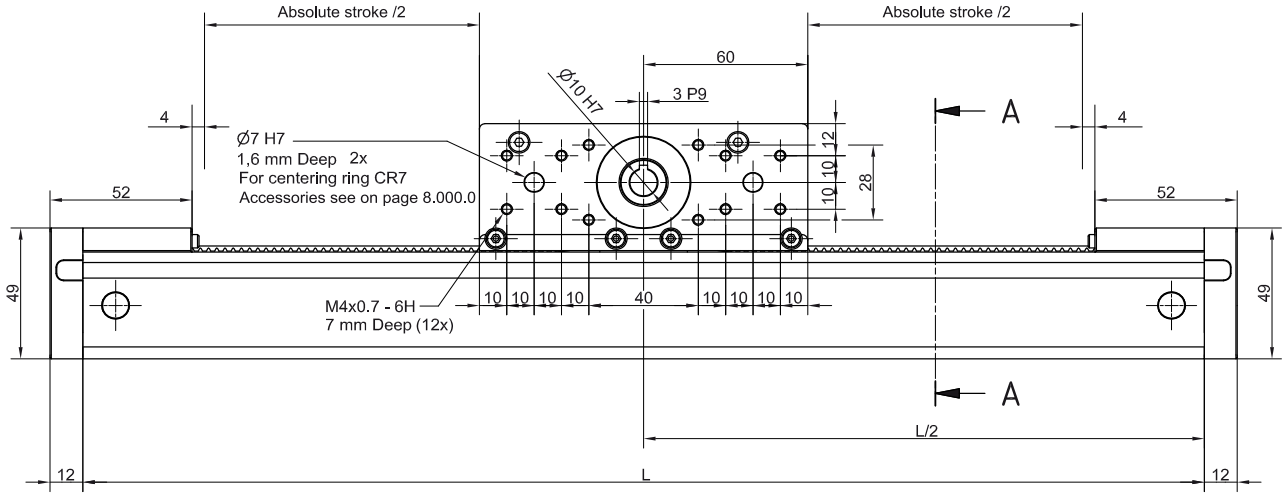

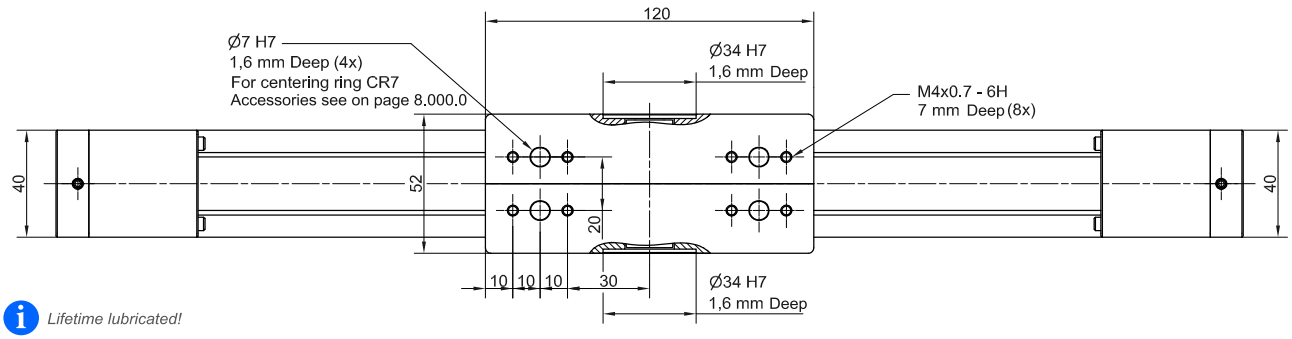

Lifetime lubricated!

All dimensions in mm; Drawings scales are not equal.

TYPE 0

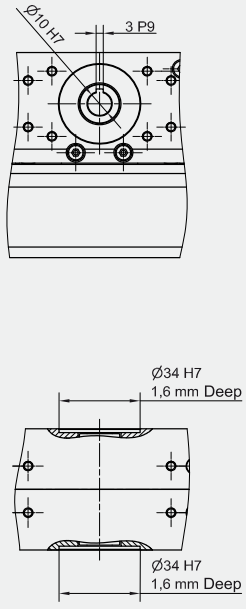

TYPE 1

Journal with or without Keyway.

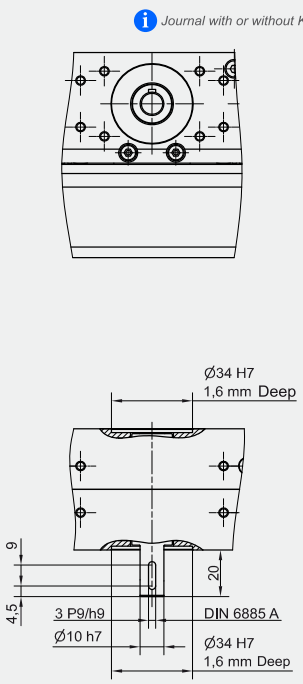

TYPE 2

Journal with or without Keyway.

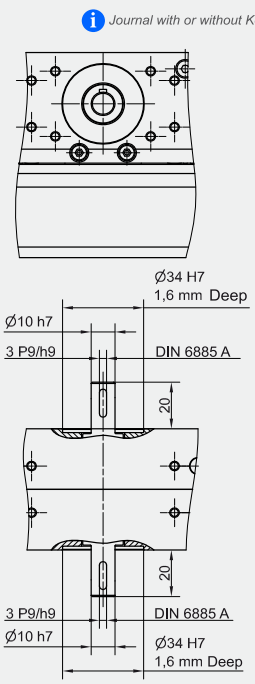

DIMENSIONS

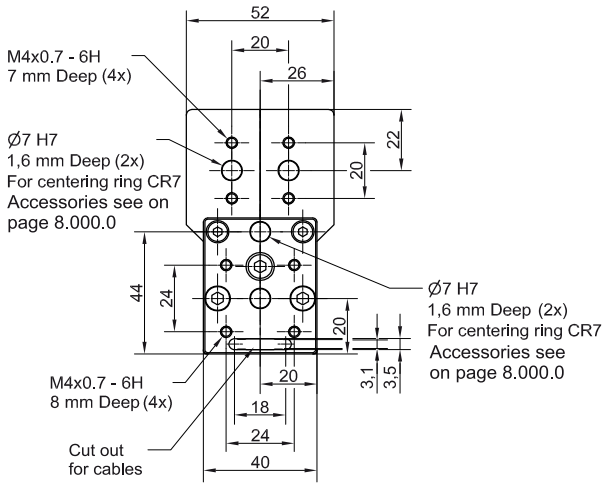

CENTERING RING CR7
Material: 1.4305 (AISI303)

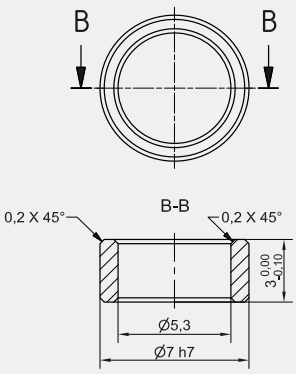

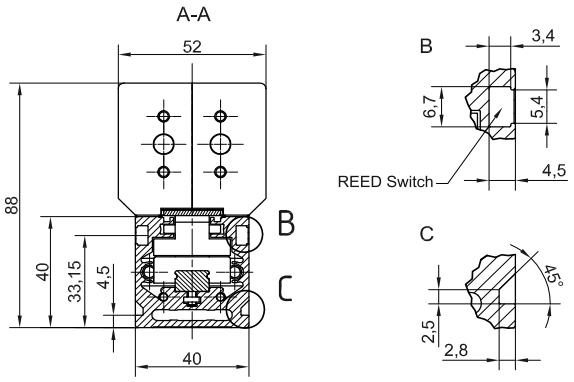



All dimensions in mm; Drawings scales are not equal.

Defining of the linear unit length

L = Effective stroke + 2 × Safety stroke + 208 mm

Ltotal = L + 24 mm

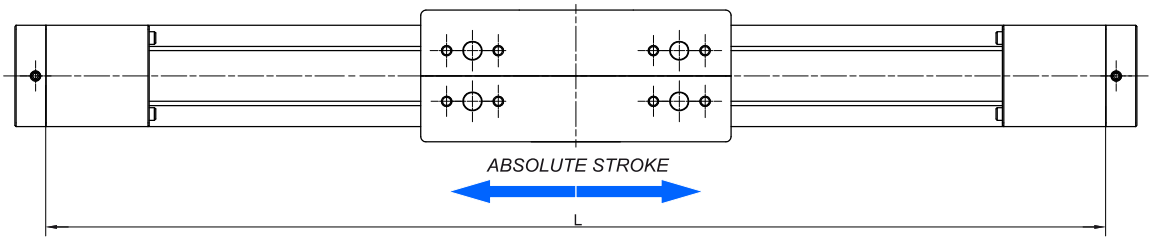

Multiple drive blocks

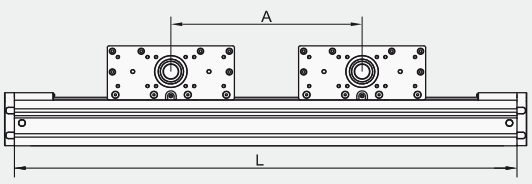

L = Effective stroke + 2 × Safety stroke + A × (n_b - 1) + 208 mm

Ltotal = L + 24 mm

} **A** ≥ 120 mm

In order to improve the products in this catalogue the specifications are subject to change without notice.

TECHNICAL DATA

General technical data

Linear Unit	Drive block length Lv [mm]	Dynamic load capacity C [N]	Dynamic moment Mx [Nm]	My [Nm]	Mz [Nm]	Mass of drive block [kg]	Maximum Repeatability [mm]	[2] Max. length [3] (Version 1) Lmax [mm]	[2] Max. length [3] (Version 2) Lmax [mm]	[2] Max. Stroke [3] (Ver. 1) [mm]	[3] (Ver. 2) [mm]	[1] Min. Stroke [mm]
MTJZ 65	200	19800	158	1025	1025	3,2	±0,08	1200	6000	880	5680	40

[1] *For minimum stroke below the stated value in the table above please contact us.*

[2] *For lengths / stroke over the stated value in the table above please contact us.*
Values for max. stroke are not valid for multiple drive blocks
(equation of defining the linear unit length for particular size of the linear unit needs to be used).

Linear Unit	Max. permissible loads Forces Fpy [N]	Fpz [N]	Moments Mpx [Nm]	Mpy [Nm]	Mpz [Nm]
MTJZ 65	6540	5870	60	305	340

[3] ***Mounting versions***

Version 1: *Mounting by the drive block, profile travels*

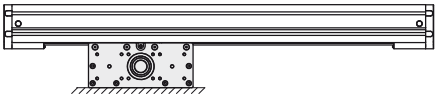

Version 2: *Mounting by the profile, drive blocks travel*

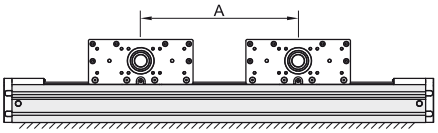

Multiple drive blocks, which travel independently of each other, can be applied.

Operating conditions	
Operating temp.	0°C ~ +60°C
Duty cycle	100%

For operating temperature out of the presented range, please contact us.

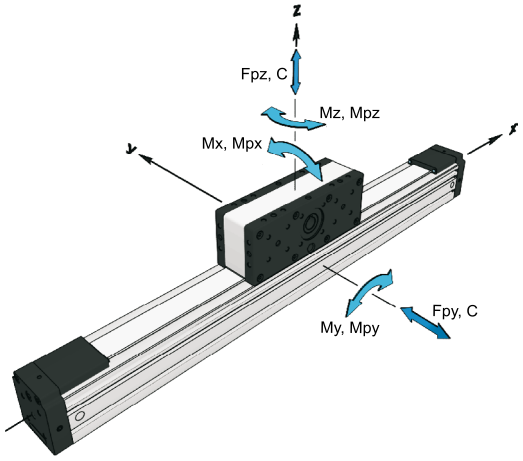

Recommended values of loads

All the data of dynamic moments and load capacities stated in the upper table are theoretical without considering any safety factor. The safety factor depends on the application and its requested safety. We recommend a minimum safety factor (fs =5.0)

Modulus of elasticity: *E = 70000 N / mm²*

Drive and belt data

Linear Unit	* Max. travel speed [m / s]	Max. drive torque [Nm]	No load torque of drive block [Nm]	Puley drive ratio [mm / rev]	Pulley diameter [mm]	Belt type	Belt width [mm]	Max. force transmited by belt [N]	Specific spring constant Cspec [N]	* Max. acceleration [m/s²]
MTJZ 65	5	13,1	0,9	165	52,52	AT5	32	500	600000	70

** For travel speed and acceleration over the stated value in the table above please contact us.*

Mass and planar moment of inertia

Linear Unit	* Mass of linear unit [kg]	Planar moment of inertia Iy [cm⁴]	Iz [cm⁴]
MTJZ 65	5,7 + 0,0054 × (Abs. stroke + (nb - 1) × A) + 3,2 × (nb - 1)	59,7	74,4

** Absolute stroke [mm]*
A - Distance between two drive blocks [mm]
nb - Number of drive blocks

Mass calculation doesn´t include mass of motor, reduction gear, switches and clamps.

TECHNICAL DATA

Mass moment of inertia

Linear Unit	* Mass moment of inertia *(Version 1)* [10^{-4} kg m^2]	Mass moment of inertia of drive block *(Version 2)* [10^{-4} kg m^2]
MTJZ 65	18,9 + 0,0374 × (Abs. stroke + (n_b - 1) × A) + 1,7 × (n_b - 1)	23,8

Absolute stroke [mm]
A - Distance between two drive blocks [mm]
n_b - Number of drive blocks

Deflection of the linear unit

Fixed - fixed mounting

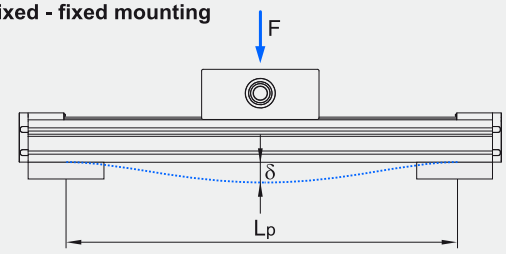

Fixed - free mounting

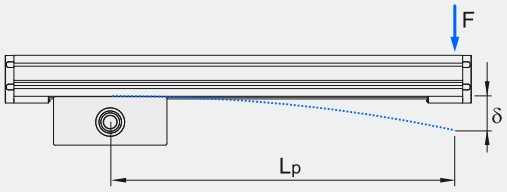

δ Maximum deflection of the linear unit [mm]
δmax Maximum permissible deflection of the linear unit [mm]
F Applied force [N]
Lp Unsupported profile length [mm]

The maximum permissible deflection δmax must not be exceeded. In the case that maximum deflection δ exceeds the maximum permissible deflection δmax additional profile supports are needed.

MTJZ 65

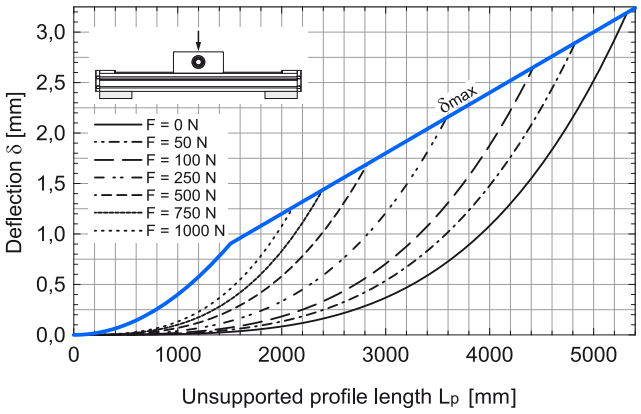

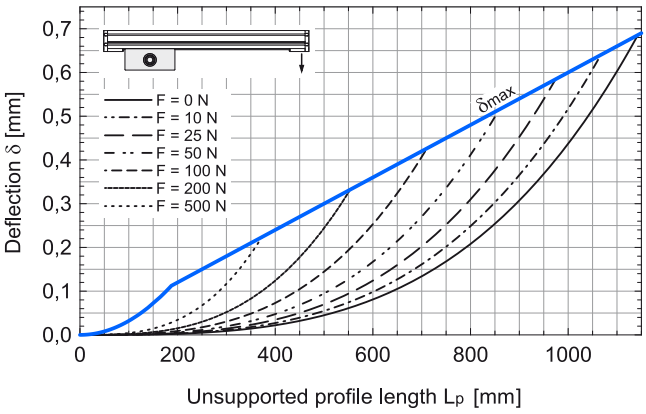

In order to improve the products in this catalogue the specifications are subject to change without notice.

DIMENSIONS

Linear Unit doesn't include any safety stroke.

Absolute stroke = Effective stroke + 2 x Safety stroke

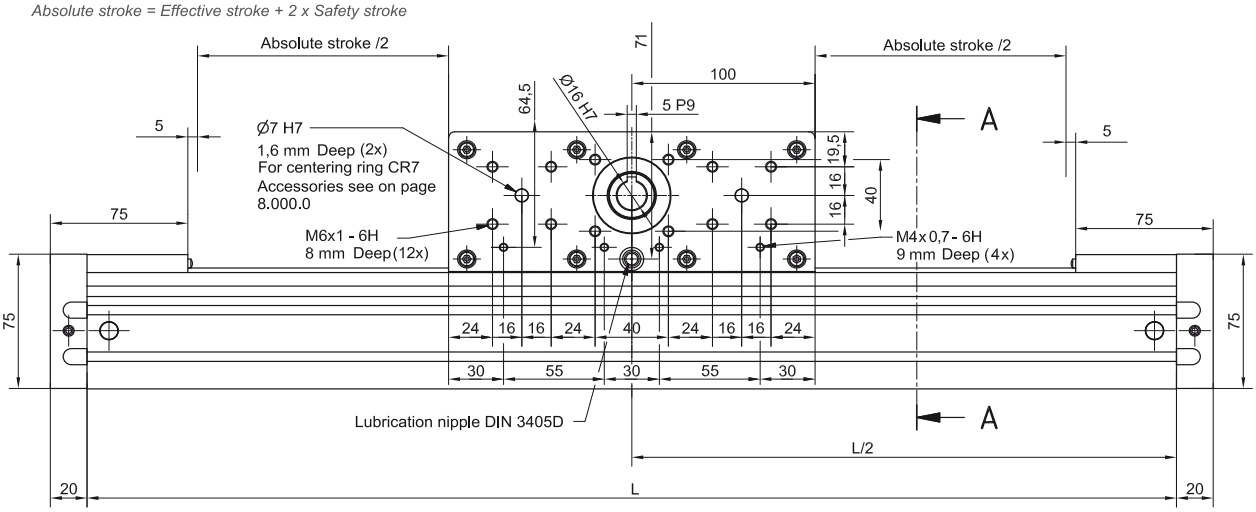

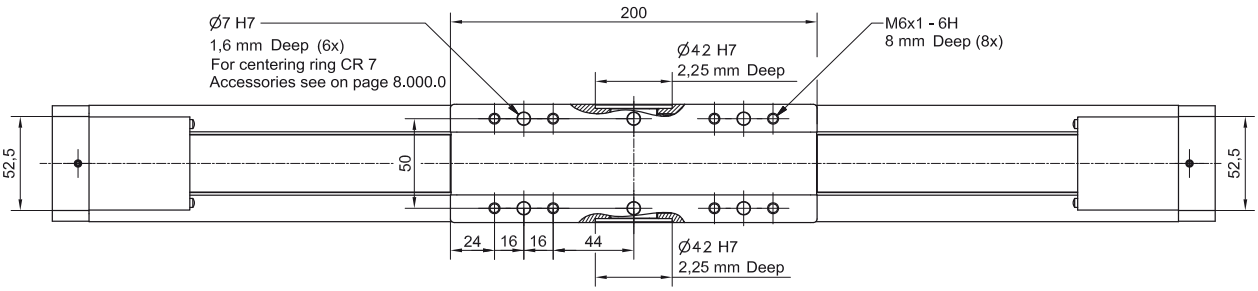

All dimensions in mm; Drawings scales are not equal.

TYPE 0

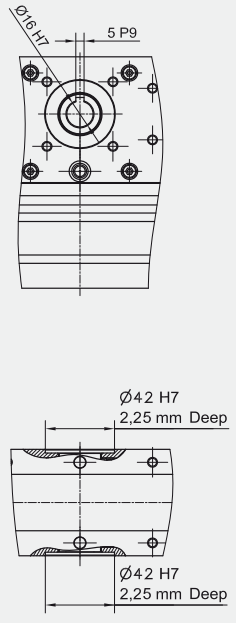

TYPE 1

Journal with or without Keyway.

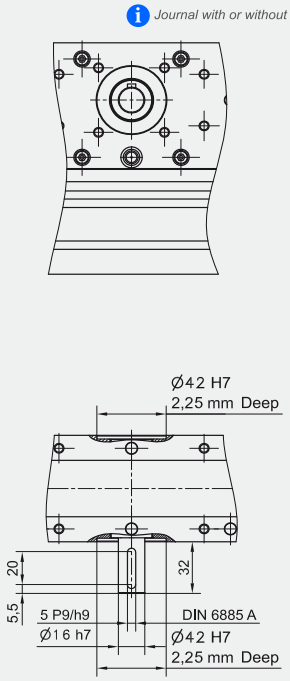

TYPE 2

Journal with or without Keyway.

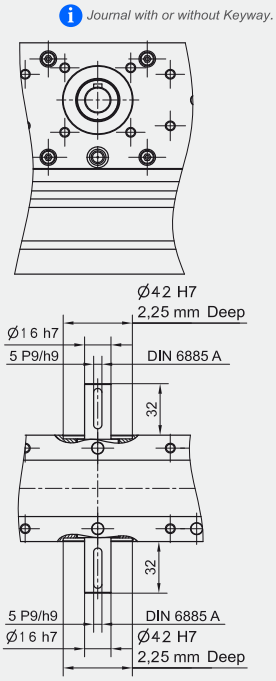

DIMENSIONS

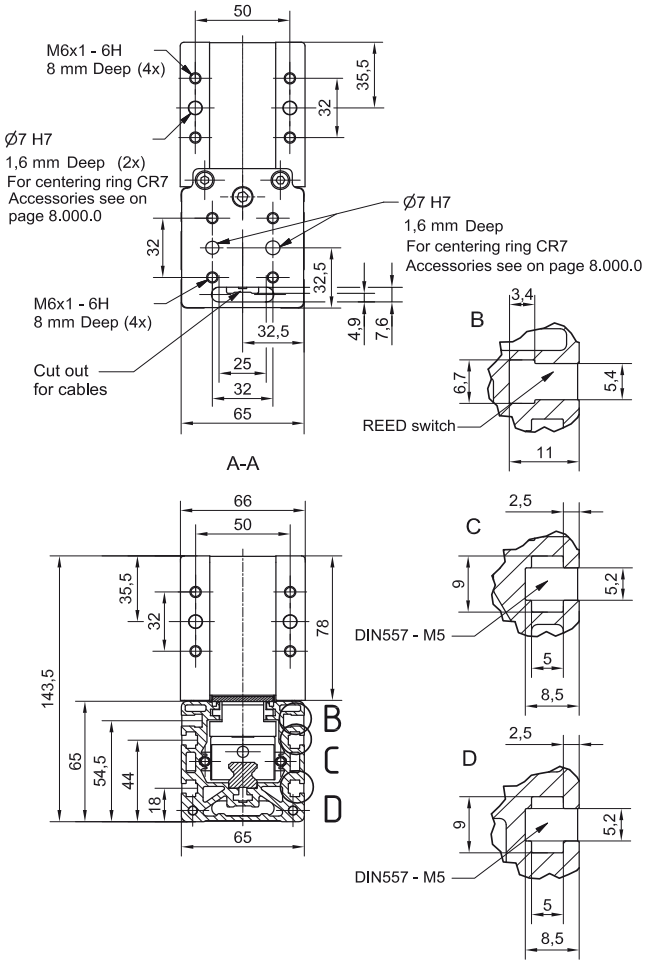

CENTERING RING CR7
Material: 1.4305 (AISI303)

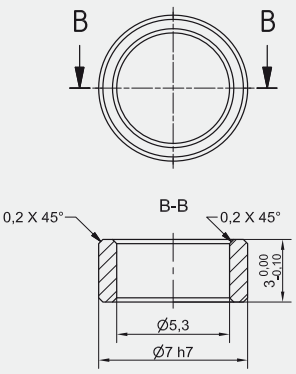

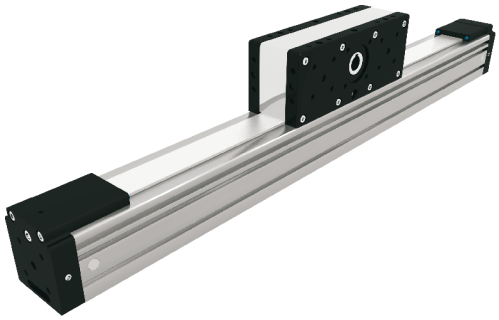

All dimensions in mm; Drawings scales are not equal.

Defining of the linear unit length

L = Effective stroke + 2 × Safety stroke + 320 mm

Ltotal = L + 40 mm

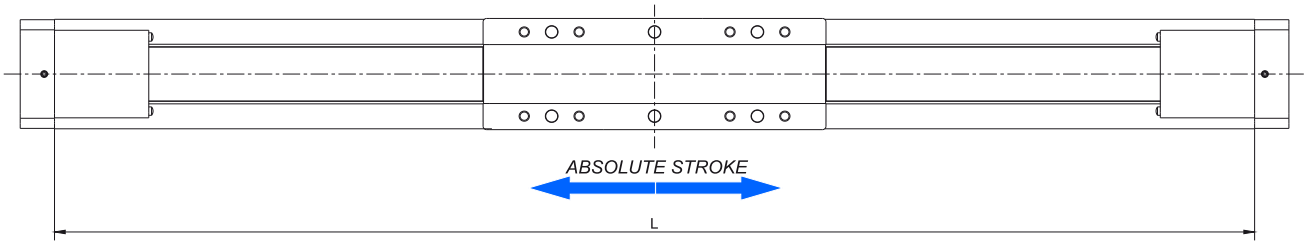

Multiple drive blocks

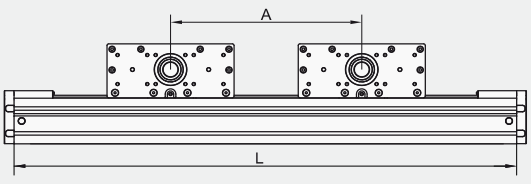

L = Effective stroke + 2 × Safety stroke + A × (n_b - 1) + 320 mm

Ltotal = L + 40 mm

A ≥ 200 mm

In order to improve the products in this catalogue the specifications are subject to change without notice.

TECHNICAL DATA

General technical data

Linear Unit	Drive block length	Dynamic load capacity	Dynamic moment			Mass of drive block	Maximum Repeatability	[2] Max. length [3] (Version 1)	[2] Max. length [3] (Version 2)	[2] Max. Stroke [3] (Ver. 1)	[3] (Ver. 2)	[1] Min. Stroke
	Lv [mm]	C [N]	Mx [Nm]	My [Nm]	Mz [Nm]	[kg]	[mm]	Lmax [mm]	Lmax [mm]	[mm]	[mm]	[mm]
MTJZ 80	250	34200	370	2565	2565	4,9	±0,08	1500	6000	1118	5618	55

[1] *For minimum stroke below the stated value in the table above please contact us.*

[2] *For lengths / stroke over the stated value in the table above please contact us.*
Values for max. stroke are not valid for multiple drive blocks
(equation of defining the linear unit length for particular size of the linear unit needs to be used).

Linear Unit	Max. permissible loads				
	Forces		Moments		
	Fpy [N]	Fpz [N]	Mpx [Nm]	Mpy [Nm]	Mpz [Nm]
MTJZ 80	8930	7130	150	535	670

[3] ***Mounting versions***

Version 1: *Mounting by the drive block, profile travels*

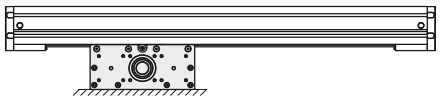

Version 2: *Mounting by the profile, drive blocks travel*

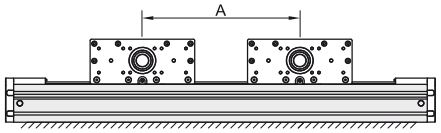

Multiple drive blocks, which travel independently of each other, can be applied.

Operating conditions	
Operating temp.	0°C ~ +60°C
Duty cycle	100%

For operating temperature out of the presented range, please contact us.

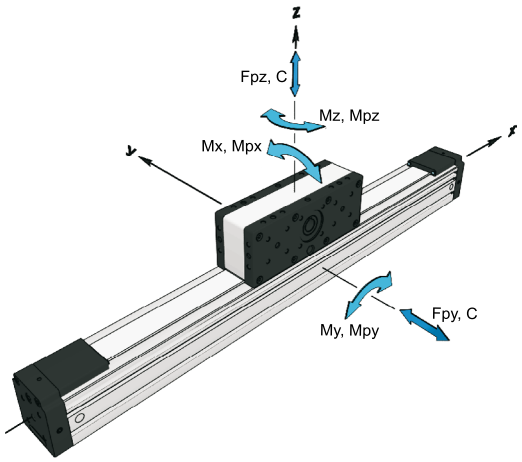

Recommended values of loads

All the data of dynamic moments and load capacities stated in the upper table are theoretical without considering any safety factor. The safety factor depends on the application and its requested safety. We recommend a minimum safety factor (fs =5.0)

Modulus of elasticity: *E = 70000 N / mm²*

Drive and belt data

Linear Unit	* Max. travel speed	Max. drive torque	No load torque of drive block	Puley drive ratio	Pulley diameter	Belt type	Belt width	Max. force transmited by belt	Specific spring constant	* Max. acceleration
	[m / s]	[Nm]	[Nm]	[mm / rev]	[mm]		[mm]	[N]	Cspec [N]	[m/s²]
MTJZ 80	5	29,4	1,4	210	66,84	AT5	50	880	960000	70

** For travel speed and acceleration over the stated value in the table above please contact us.*

Mass and planar moment of inertia

Linear Unit	* Mass of linear unit	Planar moment of inertia	
	[kg]	Iy [cm⁴]	Iz [cm⁴]
MTJZ 80	9,7 + 0,0083 × (Abs. stroke + (nb - 1) × A) + 4,9 × (nb - 1)	129,1	173,4

** Absolute stroke [mm]*
A - Distance between two drive blocks [mm]
nb - Number of drive blocks

Mass calculation doesn´t include mass of motor, reduction gear, switches and clamps.

TECHNICAL DATA

Mass moment of inertia

Linear Unit	* Mass moment of inertia *(Version 1)* [10^{-4} kg m^2]	Mass moment of inertia of drive block *(Version 2)* [10^{-4} kg m^2]
MTJZ 80	60,0 + 0,0922 × (Abs. stroke + (n_b - 1) × A) + 6,4 × (n_b - 1)	61,1

Absolute stroke [mm]
A - Distance between two drive blocks [mm]
n_b - Number of drive blocks

Deflection of the linear unit

Fixed - fixed mounting

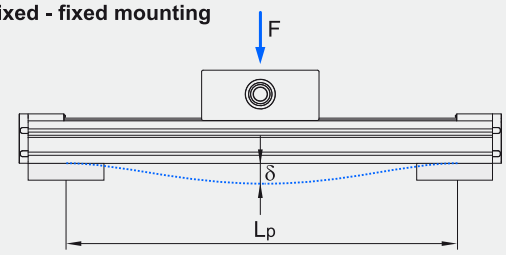

Fixed - free mounting

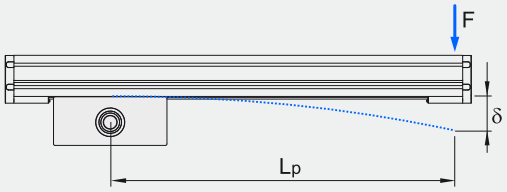

δ Maximum deflection of the linear unit [mm]
δmax Maximum permissible deflection of the linear unit [mm]
F Applied force [N]
Lp Unsupported profile length [mm]

The maximum permissible deflection δmax must not be exceeded. In the case that maximum deflection δ exceeds the maximum permissible deflection δmax additional profile supports are needed.

MTJZ 80

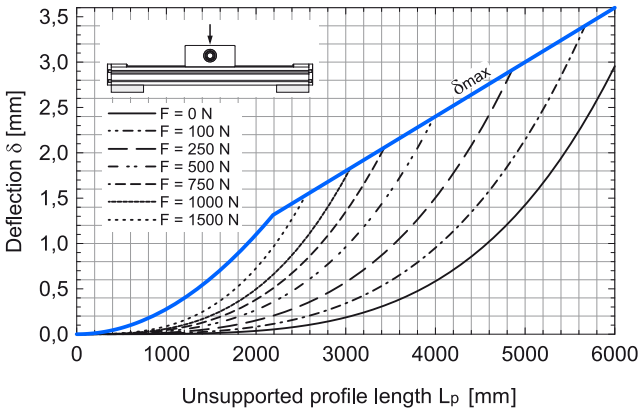

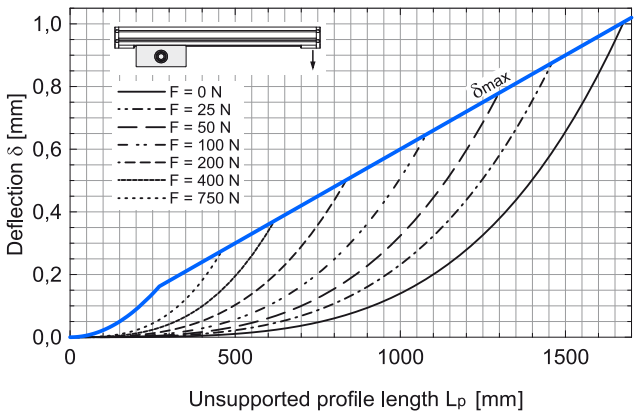

In order to improve the products in this catalogue the specifications are subject to change without notice.

DIMENSIONS

Linear Unit doesn't include any safety stroke.

Absolute stroke = Effective stroke + 2 x Safety stroke

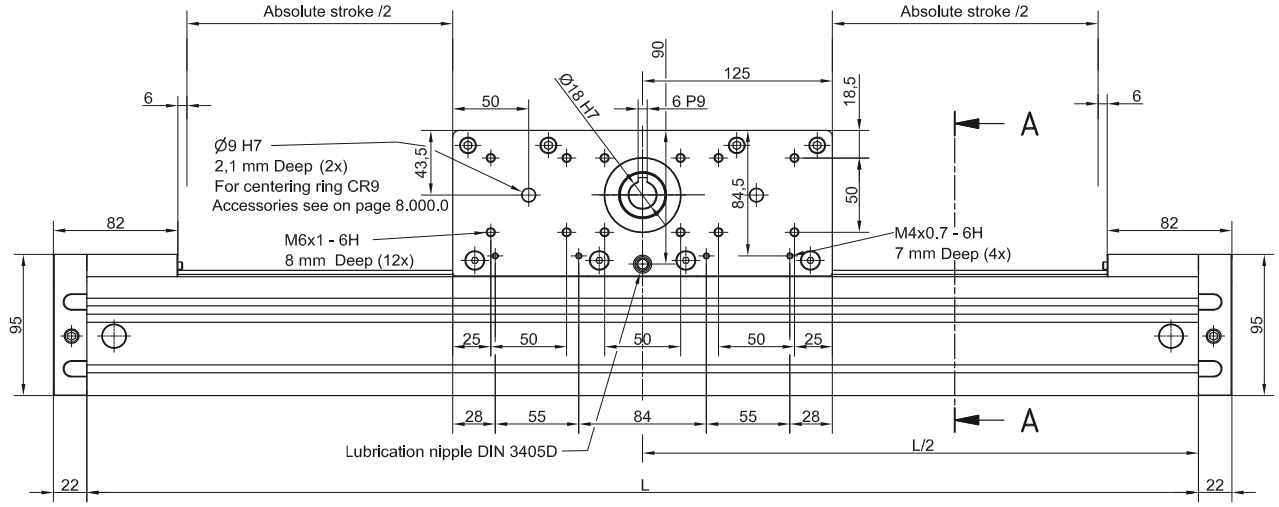

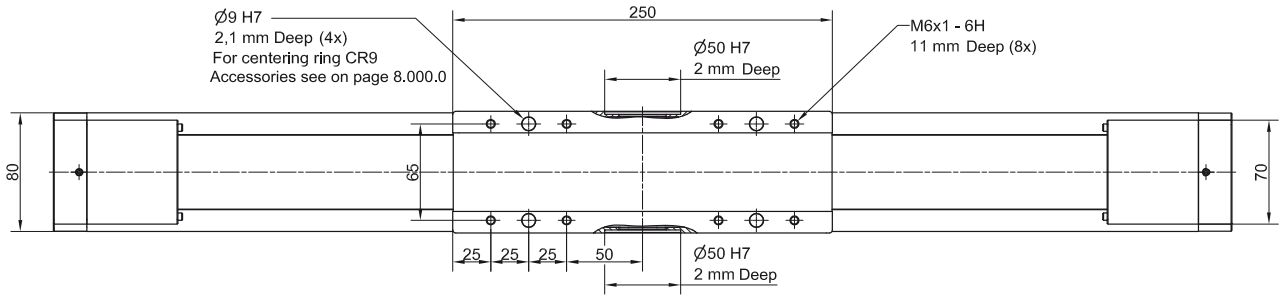

All dimensions in mm; Drawings scales are not equal.

TYPE 0

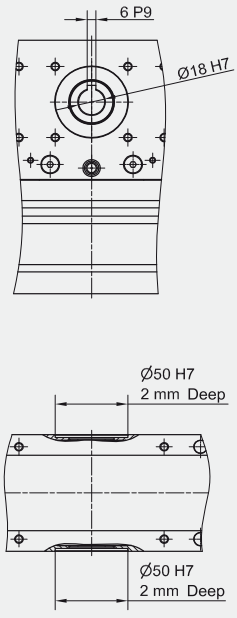

TYPE 1

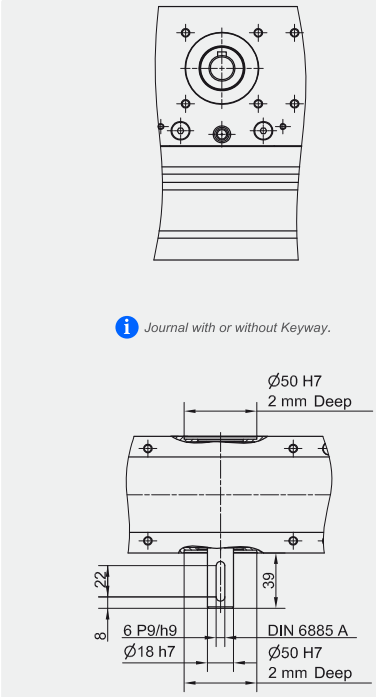

TYPE 2

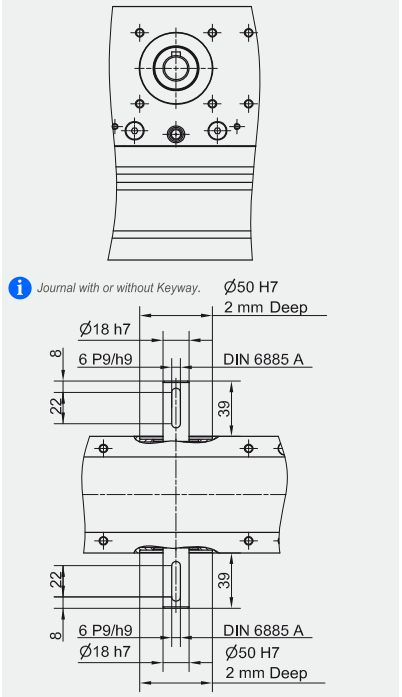

DIMENSIONS

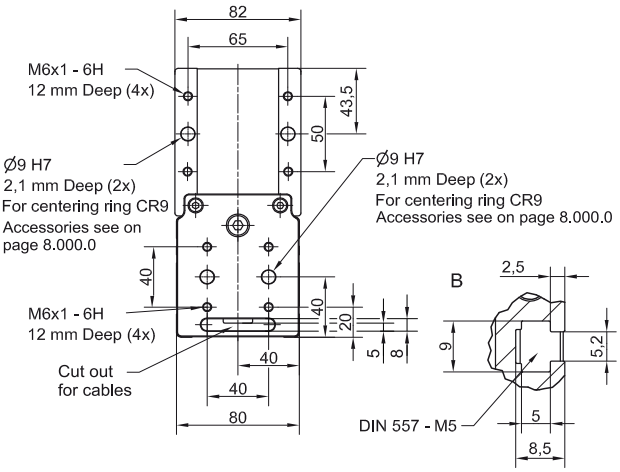

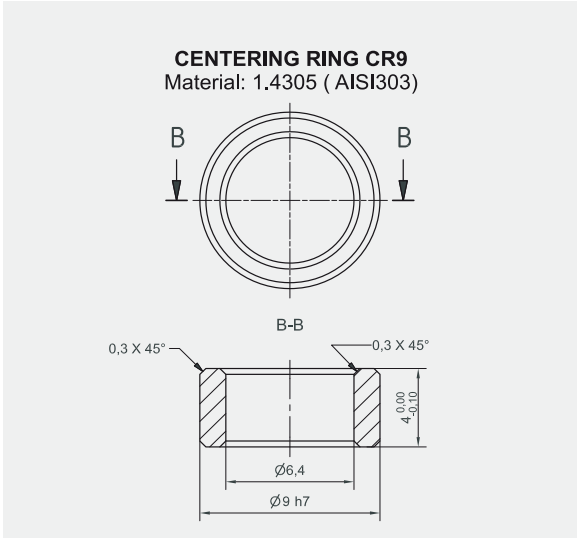

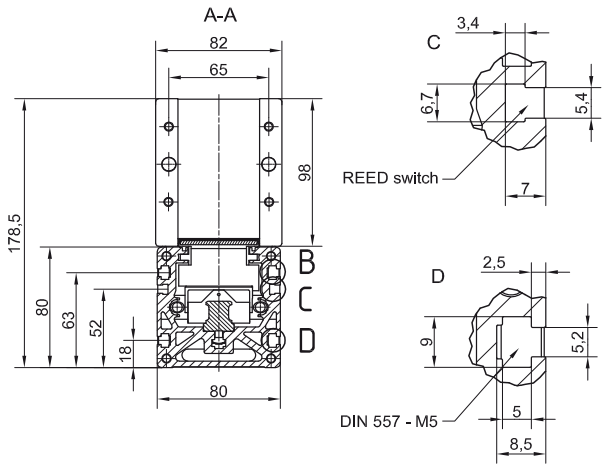



All dimensions in mm; Drawings scales are not equal.

Defining of the linear unit length

L = Effective stroke + 2 × Safety stroke + 382 mm

Ltotal = L + 44 mm

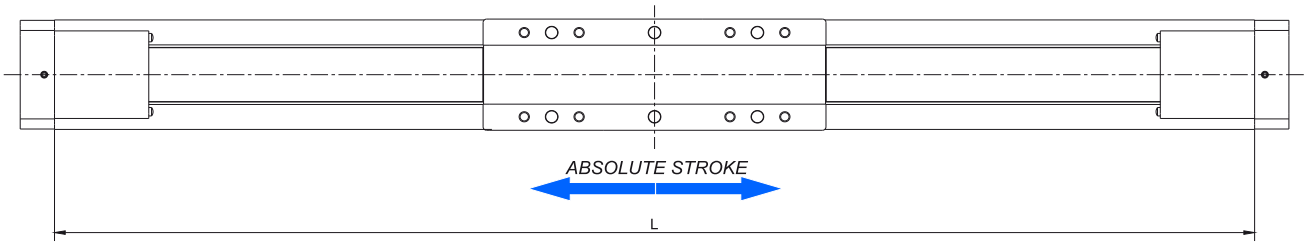

Multiple drive blocks

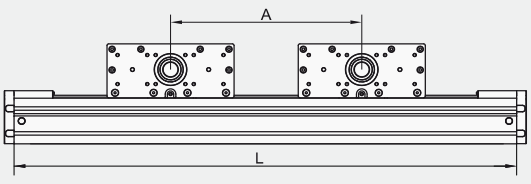

L = Effective stroke + 2 × Safety stroke + A × (n_b - 1) + 382 mm

Ltotal = L + 44 mm

A ≥ 250 mm

In order to improve the products in this catalogue the specifications are subject to change without notice.

TECHNICAL DATA

General technical data

Linear Unit	Drive block length Lv [mm]	Dynamic load capacity C [N]	Dynamic moment Mx [Nm]	My [Nm]	Mz [Nm]	Mass of drive block [kg]	Maximum Repeatability [mm]	[2] Max. length [3] (Version 1) Lmax [mm]	[2] Max. length [3] (Version 2) Lmax [mm]	[2] Max. Stroke [3] (Ver. 1) [mm]	[3] (Ver. 2) [mm]	[1] Min. Stroke [mm]
MTJZ 110	300	49600	630	3470	3470	11,3	±0,08	1800	6000	1304	5504	65

[1] *For minimum stroke below the stated value in the table above please contact us.*

[2] *For lengths / stroke over the stated value in the table above please contact us.*
Values for max. stroke are not valid for multiple drive blocks
(equation of defining the linear unit length for particular size of the linear unit needs to be used).

Linear Unit	Max. permissible loads Forces Fpy [N]	Fpz [N]	Moments Mpx [Nm]	Mpy [Nm]	Mpz [Nm]
MTJZ 110	10000	14290	260	1000	700

[3] ***Mounting versions***

Version 1: *Mounting by the drive block, profile travels*

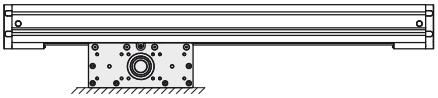

Version 2: *Mounting by the profile, drive blocks travel*

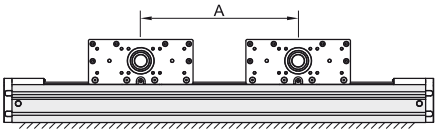

Multiple drive blocks, which travel independently of each other, can be applied.

Operating conditions	
Operating temp.	0°C ~ +60°C
Duty cycle	100%

For operating temperature out of the presented range, please contact us.

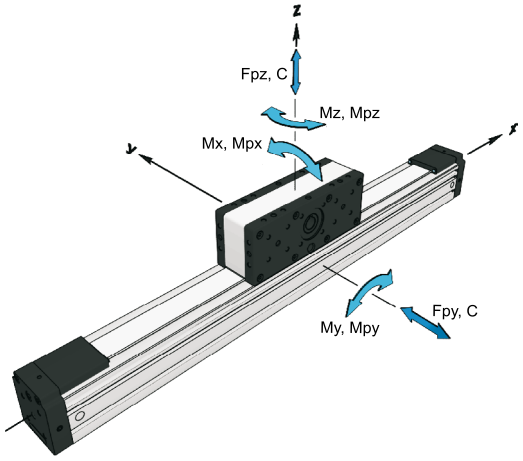

Recommended values of loads

All the data of dynamic moments and load capacities stated in the upper table are theoretical without considering any safety factor. The safety factor depends on the application and its requested safety. We recommend a minimum safety factor (fs =5.0)

Modulus of elasticity: *E = 70000 N / mm²*

Drive and belt data

Linear Unit	* Max. travel speed [m / s]	Max. drive torque [Nm]	No load torque of drive block [Nm]	Puley drive ratio [mm / rev]	Pulley diameter [mm]	Belt type	Belt width [mm]	Max. force transmited by belt [N]	Specific spring constant Cspec [N]	* Max. acceleration [m/s²]
MTJZ 110	5	110,0	2,6	300	95,49	AT10	70	2300	2450000	70

**For travel speed and acceleration over the stated value in the table above please contact us.*

Mass and planar moment of inertia

Linear Unit	* Mass of linear unit [kg]	Planar moment of inertia Iy [cm⁴]	Iz [cm⁴]
MTJZ 110	21,7 + 0,0147 × (Abs. stroke + (nb - 1) × A) + 11,3 × (nb - 1)	513,0	620,0

**Absolute stroke [mm]*
A - Distance between two drive blocks [mm]
nb - Number of drive blocks

Mass calculation doesn´t include mass of motor, reduction gear, switches and clamps.

TECHNICAL DATA

Mass moment of inertia

Linear Unit	* Mass moment of inertia *(Version 1)* [10^{-4} kg m^2]	Mass moment of inertia of drive block *(Version 2)* [10^{-4} kg m^2]
MTJZ 110	282,4 + 0,3358 × (Abs. stroke + (n_b - 1) × A) + 45,3 × (n_b - 1)	302,9

Absolute stroke [mm]
A - Distance between two drive blocks [mm]
n_b - Number of drive blocks

Deflection of the linear unit

Fixed - fixed mounting

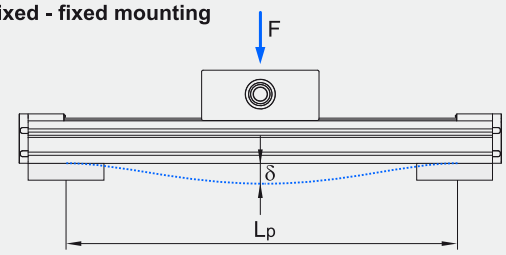

Fixed - free mounting

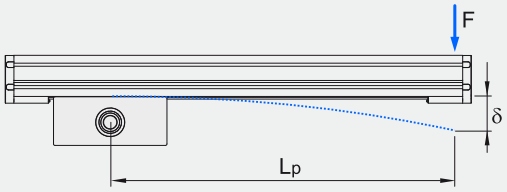

δ Maximum deflection of the linear unit [mm]
δmax Maximum permissible deflection of the linear unit [mm]
F Applied force [N]
Lp Unsupported profile length [mm]

The maximum permissible deflection δmax must not be exceeded. In the case that maximum deflection δ exceeds the maximum permissible deflection δmax additional profile supports are needed.

MTJZ 110

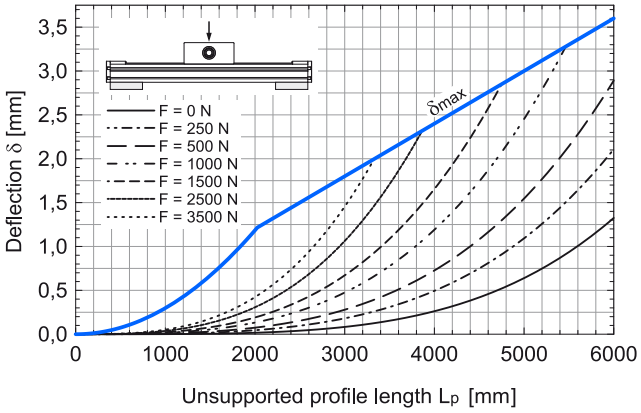

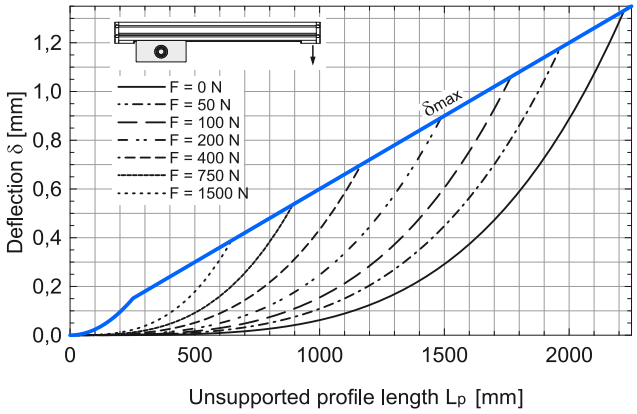

In order to improve the products in this catalogue the specifications are subject to change without notice.

DIMENSIONS

Linear Unit doesn't include any safety stroke.

Absolute stroke = Effective stroke + 2 x Safety stroke

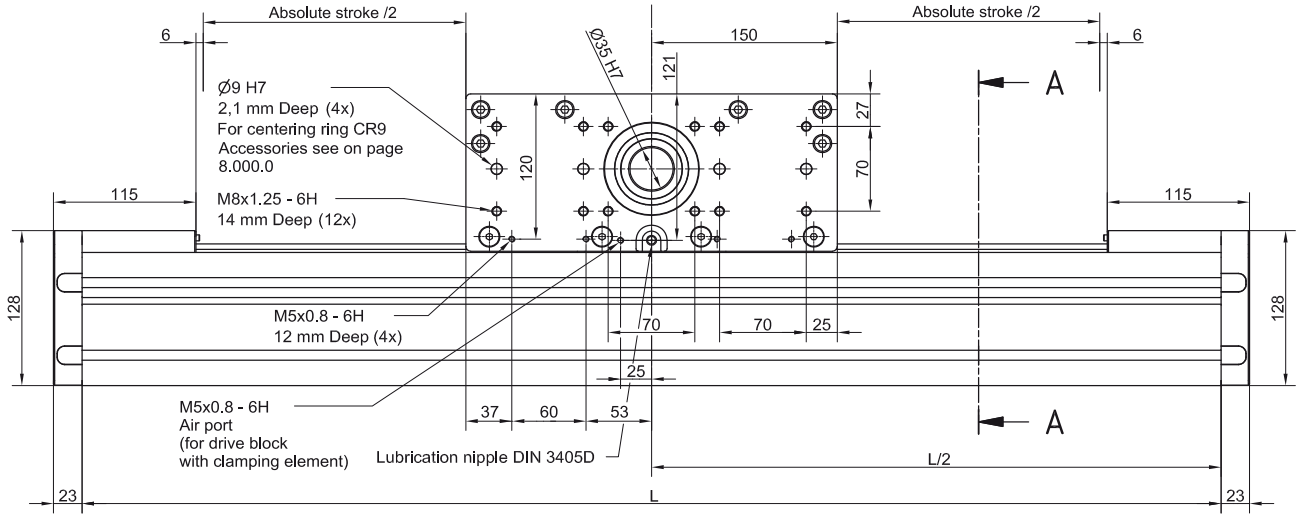

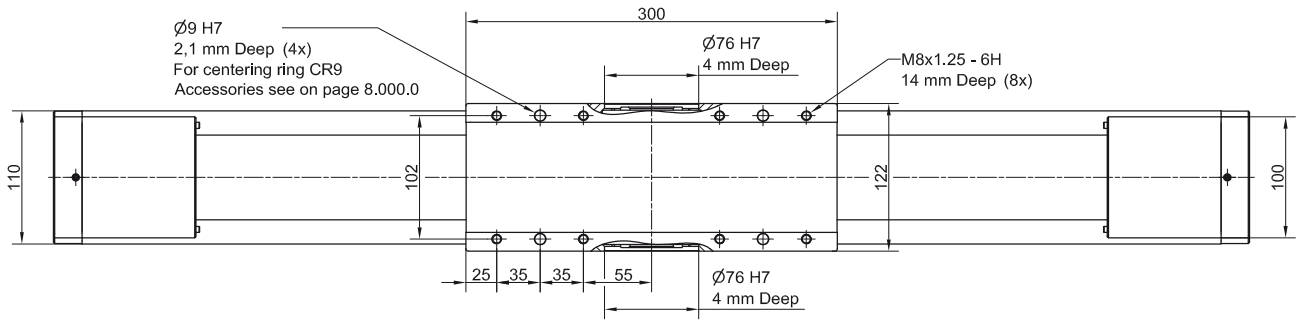

All dimensions in mm; Drawings scales are not equal.

TYPE 0

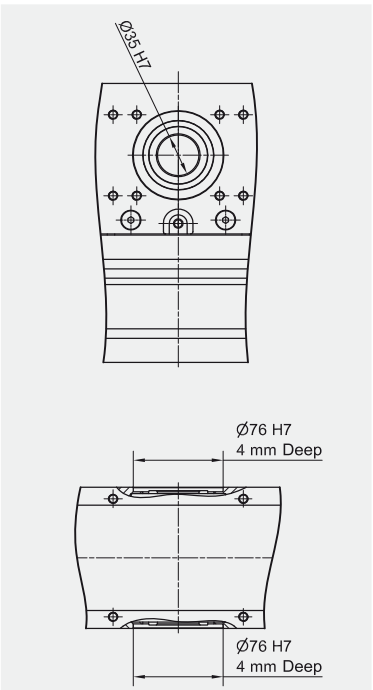

Drive block with clamping element

Clamping by spring-loaded energy

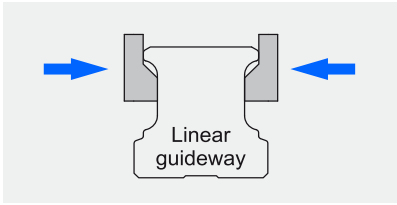

Air pressure = 0 bar

Holding force = 1400 N

Holding force is tested on clamping element using a slightly lubricated rail (ISO VG 68).

Opened by air pressure

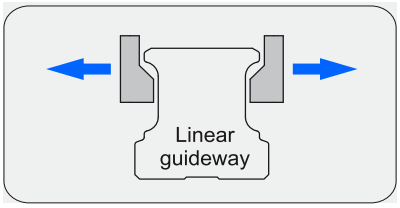

Opening air pressure = 5,5 - 8 bar

The air pressure opens clamping pistons. Free movement is allowed.

Purified and oiled air shall be used (according to ISO 8573-1 Class 4). Recommended filter size is 25 µm.

Linear Unit	Mass of drive block [kg]	* Mass of linear unit [kg]
MTJZ 110	12,9	23,3 + 0,0147 × (Abs. stroke + (nb - 1) × A) + 12,9 × (nb - 1)

**Absolute stroke [mm]*
A - Distance between two drive blocks [mm]
nb - Number of drive blocks

DIMENSIONS

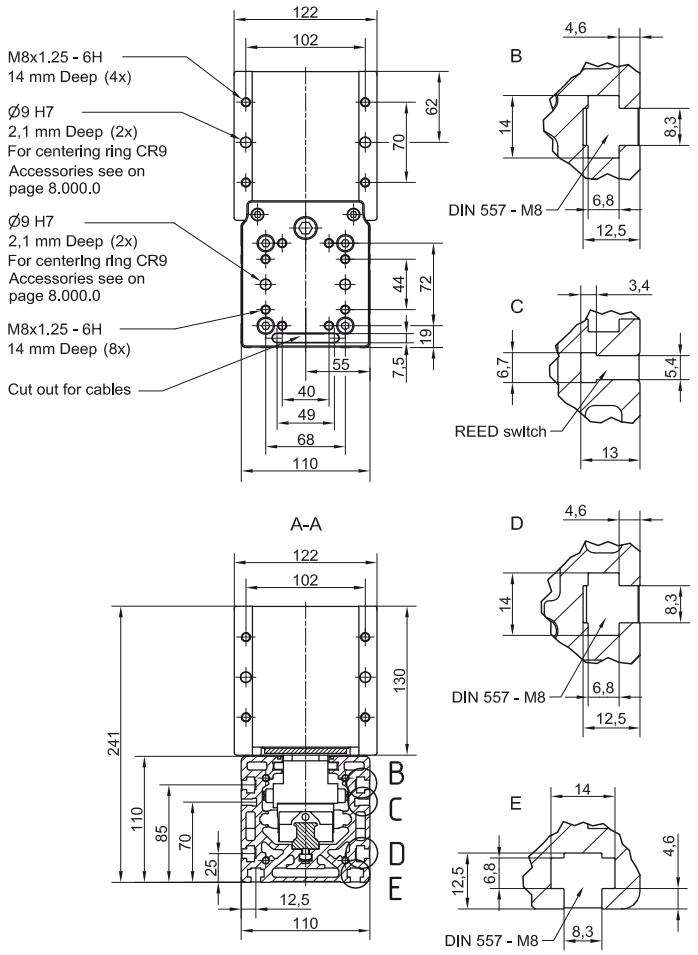

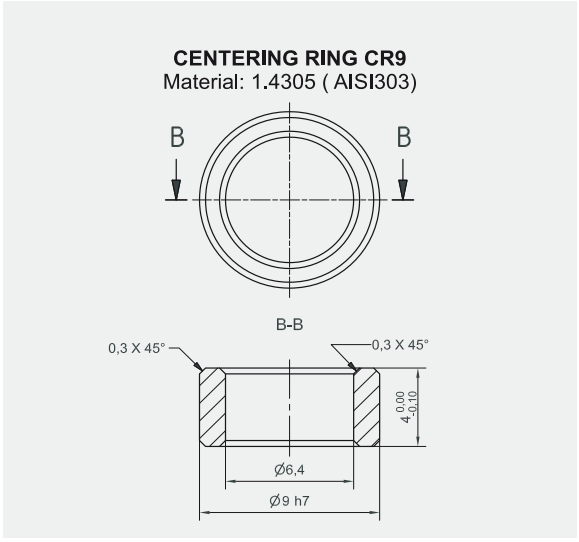

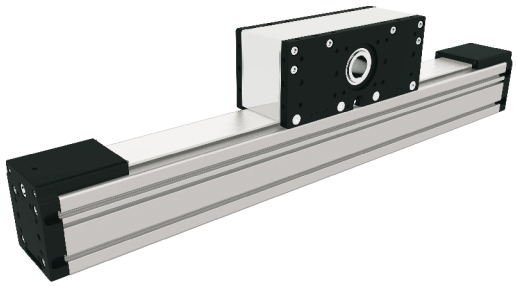

All dimensions in mm; Drawings scales are not equal.

Defining of the linear unit length

L = Effective stroke + 2 × Safety stroke + 496 mm

Ltotal = L + 46 mm

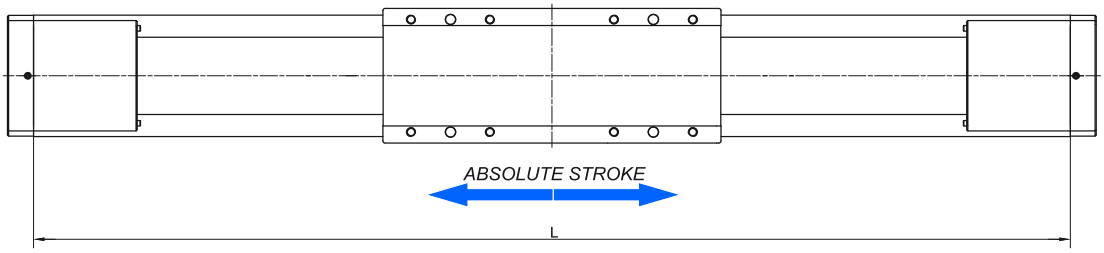

Multiple drive blocks

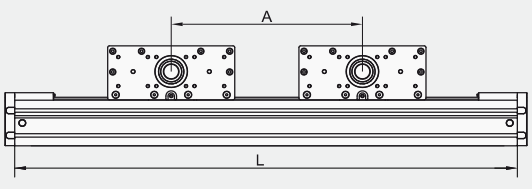

L = Effective stroke + 2 × Safety stroke + A × (n_B - 1) + 496 mm

Ltotal = L + 46 mm

A ≥ 300 mm

***A** ≥ 410 mm

** In case of using the drive blocks with clamping element*

In order to improve the products in this catalogue the specifications are subject to change without notice.

CTJ

CHARACTERISTICS

The **CTJ** series includes Linear Units with a toothed belt drive and two parallel, integrated, Zero-backlash rail guides. Compact dimensions allow high performance features such as, high speed and repeatability. They can easily be combined to multi-axis systems.
Excellent price-/performance ratio and quick delivery time are ensured.
A compact , precision-extruded aluminum Profile from AL 6063, with two parallel, integrated Zero-backlash rail guide systems, allows high load capacities and an optimal sequence for the movement of larger masses at high speed.
In the linear units CTJ is used a pre-tensioned steel reinforced AT polyurethane timing toothed belt. In conjunction with a Zero-backlash drive pulley high moments with alternating loads with good positioning accuracy, low wear and low noise can be realized.
The in the Profile slot driving Polyurethane timing belt, protects all the parts in the Profile from dust and other contaminations.
Different carriage lengths with lubrication port allows for easy re-lubrication of the Ball rail guide system and allows the possibility to attach additional accessories. The re-lubrication can also be done through maintenance holes on the side of the Profile.
The aluminum profile includes T-slots for fixing the Linear Unit and for attaching sensors and switches. Also, a Reed switch can be used here.
For the linear units CTJ various adaptation options, for attaching (or redirecting), for Motors or Gearboxes are available.

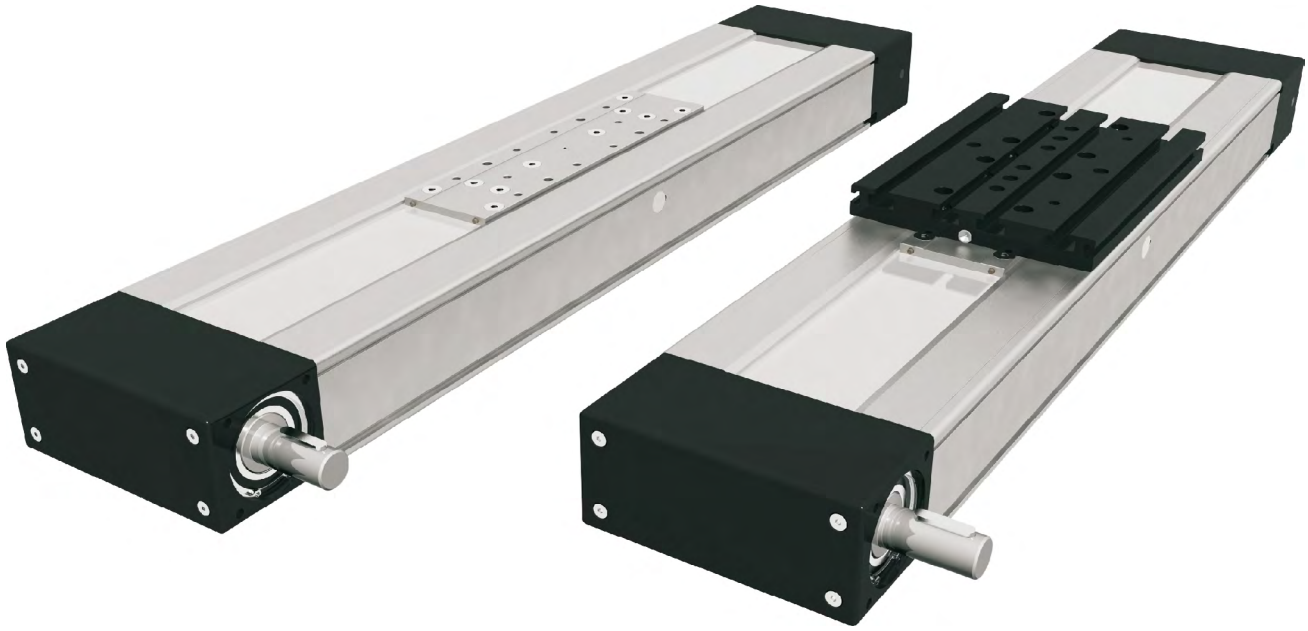

The aluminium profiles are manufactured according to the medium EN 12020-2 standard

Straightness = 0,35 mm/m; Max. torsion = 0,35 mm/m; Angular torsion = 0,2 mm/40 mm; Parallelism = 0,2 mm

In order to improve the products in this catalogue the specifications are subject to change without notice.

STRUCTURAL DESIGN

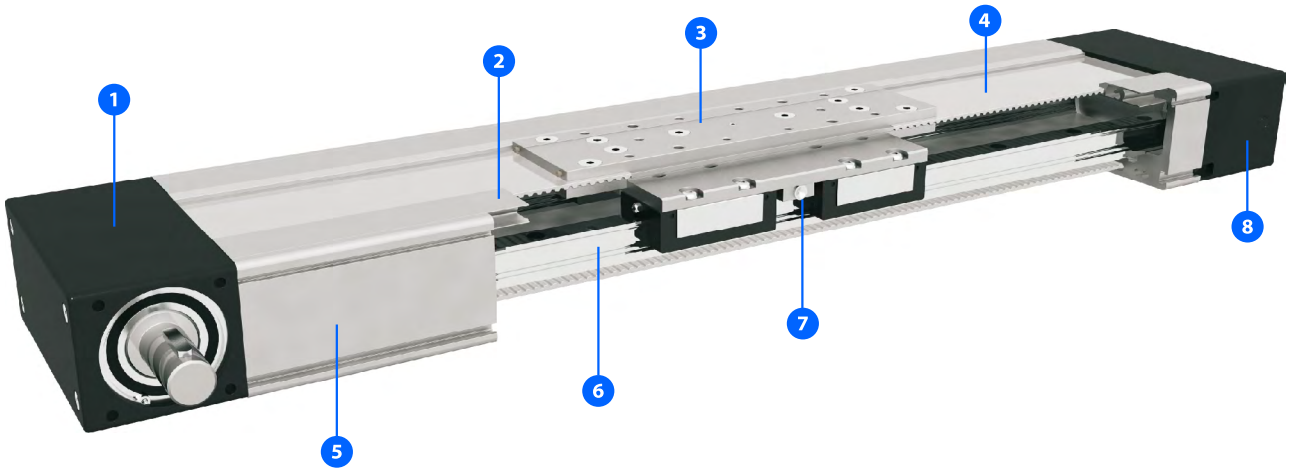

1 - Drive block with pulley
2 - Aluminum cover
3 - Carriage; with built in Magnets
4 - AT polyurethane toothed belt with steel tension cords
5 - Aluminium profile-Hard anodized
6 - Two integrated Linear Ball Guideways
7 - Central lubrication port; both sides
8 - Tension End with integrated belt tensioning system

HOW TO ORDER



Series :
CTJ

Size :
90
110
145
200

Absolute stroke [mm] :
(Absolute stroke = Effective stroke + 2 x Safety stroke)

Carriage Version :
S : Short
L : Long

Number of carriages :
The stated number specifies the number of carriages on one Linear unit
(up to 5 carriages avaliable)
Leave blank : For the case of one carriage

Distance between two carriages [mm] :
Leave blank : For the case of one carriage

Type of drive pulley :
1 : Pulley with journal
10 : Pulley with journal (without Keyway)
2 : Pulley with journal on both sides
20 : Pulley with journal on both sides (without Keyway)
3 : Without drive unit

Drive journal position :
L : Journal on left side
R : Journal on right side
Leave blank : For type of drive pulley 2, 20 and 3

*By CTJ 200 with drive pulley 2 or 20, the drive journal position left - **L** or right - **R** side must be also specified - motor/gearbox attachment side.*

Connection plate :
0: Without
1: With

In order to improve the products in this catalogue the specifications are subject to change without notice.

TECHNICAL DATA

General technical data

Linear Unit	Carriage length	Dynamic load capacity	Dynamic moment			Max. permissible loads Forces		Max. permissible loads Moments			Moved mass	Max. Repeatability	* Max. length	* Max. stroke	** Min. stroke
	Lv [mm]	C [N]	Mx [Nm]	My [Nm]	Mz [Nm]	Fpy [N]	Fpz [N]	Mpx [Nm]	Mpy [Nm]	Mpz [Nm]	[kg]	[mm]	Lmax [mm]	[mm]	[mm]
CTJ 90 S	102	4620	125	17	34	2000	4000	110	17	34	0,20	± 0,08	6000	5873	25
CTJ 90 L	156	9240	250	290	290	3990	8270	200	290	125	0,35	± 0,08		5819	25

*For lengths / stroke over the stated value in the table above please contact us.
Values for max. stroke are not valid for multiple carriages
(equation of defining the linear unit length for particular size of the linear unit needs to be used).

**For minimum stroke below the stated value in the table above please contact us.

Operating conditions	
Operating temp.	0°C ~ +60°C
Duty cycle	100%

For operating temperature out of the presented range, please contact us.

Recommended values of loads

All the data of dynamic moments and load capacities stated in the upper table are theoretical without considering any safety factor. The safety factor depends on the application and its requested safety. We recommend a minimum safety factor (fs =5.0)

Modulus of elasticity

E = 70000 N / mm²

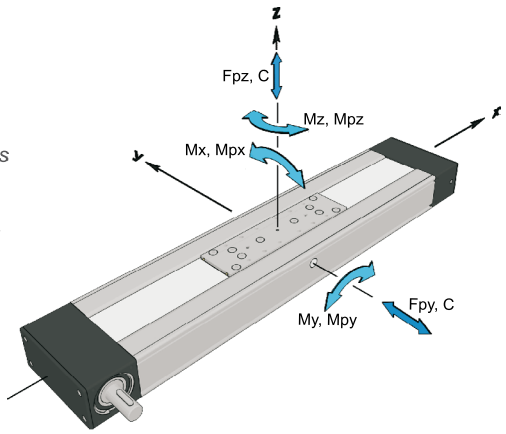

General technical data for double carriage

Linear Unit	Carriage version	Dynamic load capacity	* Dynamic moment			* Max. permissible loads Forces		* Max. permissible loads Moments		
		C [N]	Mx [Nm]	My [Nm]	Mz [Nm]	Fpy [N]	Fpz [N]	Mpx [Nm]	Mpy [Nm]	Mpz [Nm]
CTJ 90	S2	9230	250	4,6 × A	4,6 × A	4000	8000	220	4,0 × A	2,0 × A
	L2	18400	500	9,2 × A	9,2 × A	8000	16500	400	8,3 × A	4,0 × A

*A - Distance between carriages [mm]. More info on following pages.

Presented values are for informational purposes only. Exact values can be calculated using our sizing selection tool on Unimotion web site.

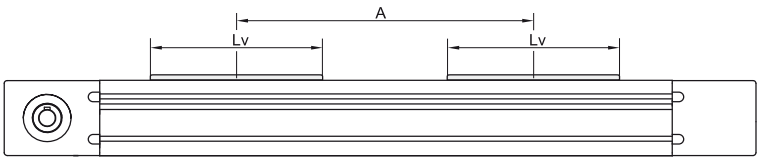

Drive and belt data

Linear Unit	** Max. travel speed	Max. drive torque	* No load torque	Puley drive ratio	Pulley diameter	Belt type	Belt width	Max. force transmited by belt	Specific spring constant Cspec	** Max. acceleration
	[m / s]	[Nm]	[Nm]	[mm / rev]	[mm]		[mm]	[N]	[N]	[m/s²]
CTJ 90 S	5	7,5	0,40 × nc	90	28,65	AT 3	35	520	402500	70
CTJ 90 L			0,42 × nc							

*The stated values are for strokes (and distances between the carriages A) up to 500mm. No Load Torque value increases with stroke (and with A) elongation.
nc - Number of carriages

**For travel speed and acceleration over the stated value in the table above please contact us.

TECHNICAL DATA

Mass and mass moment of inertia

Linear Unit	Mass of linear unit [kg]	Mass moment of inertia [10^{-5} kg m^2]	Planar moment of inertia Iy [cm^4]	Iz [cm^4]
CTJ 90 S	1,7 + 0,0048 × (Abs. stroke + (nc - 1) × A) + 0,20 × (nc - 1)	7 + 0,0031 × (Abs. stroke + (nc - 1) × A) + 4,1 × (nc - 1)	13,4	107,0
CTJ 90 L	2,1 + 0,0048 × (Abs. stroke + (nc - 1) × A) + 0,35 × (nc - 1)	11 + 0,0031 × (Abs. stroke + (nc - 1) × A) + 7,2 × (nc - 1)		

*Absolute stroke [mm]
A - Distance between carriages [mm]. More info on following pages.
nc - Number of carriages

Mass calculation doesn´t include mass of motor, reduction gear, switches and clamps.

Deflection of the linear unit

Fixed - fixed mounting

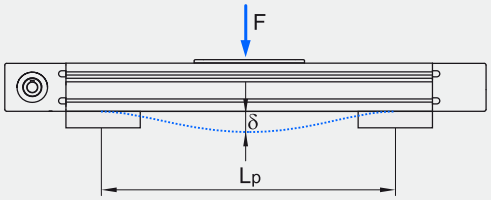

Fixed - free mounting

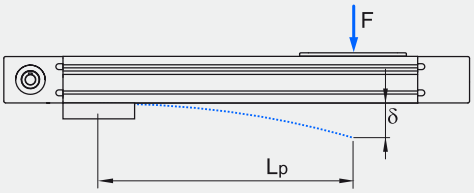

δ Maximum deflection of the linear unit [mm]
δmax Maximum permissible deflection of the linear unit [mm]
F Applied force [N]
Lp Unsupported profile length [mm]

The maximum permissible deflection δmax must not be exceeded. In the case that maximum deflection δ exceeds the maximum permissible deflection δmax additional profile supports are needed.

CTJ 90

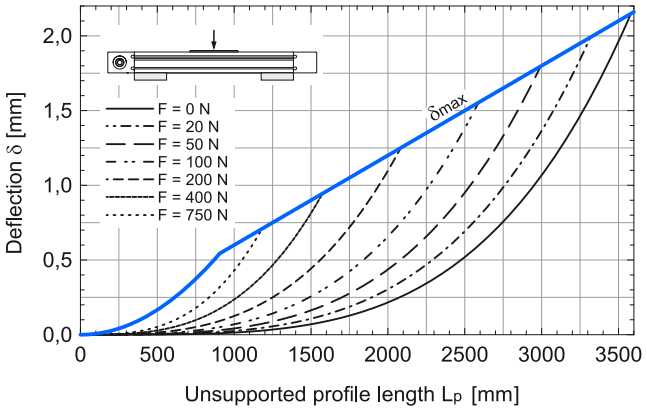

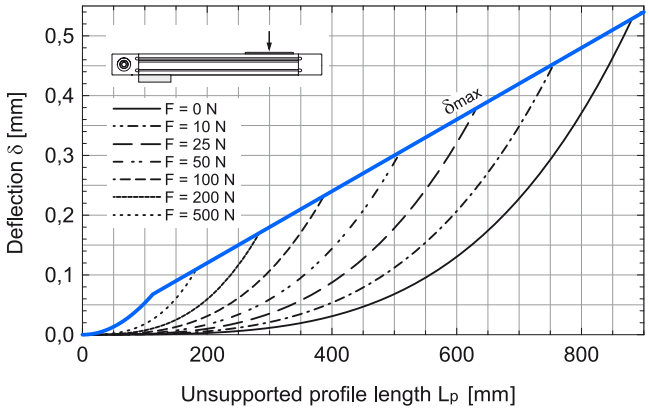

In order to improve the products in this catalogue the specifications are subject to change without notice.

DIMENSIONS

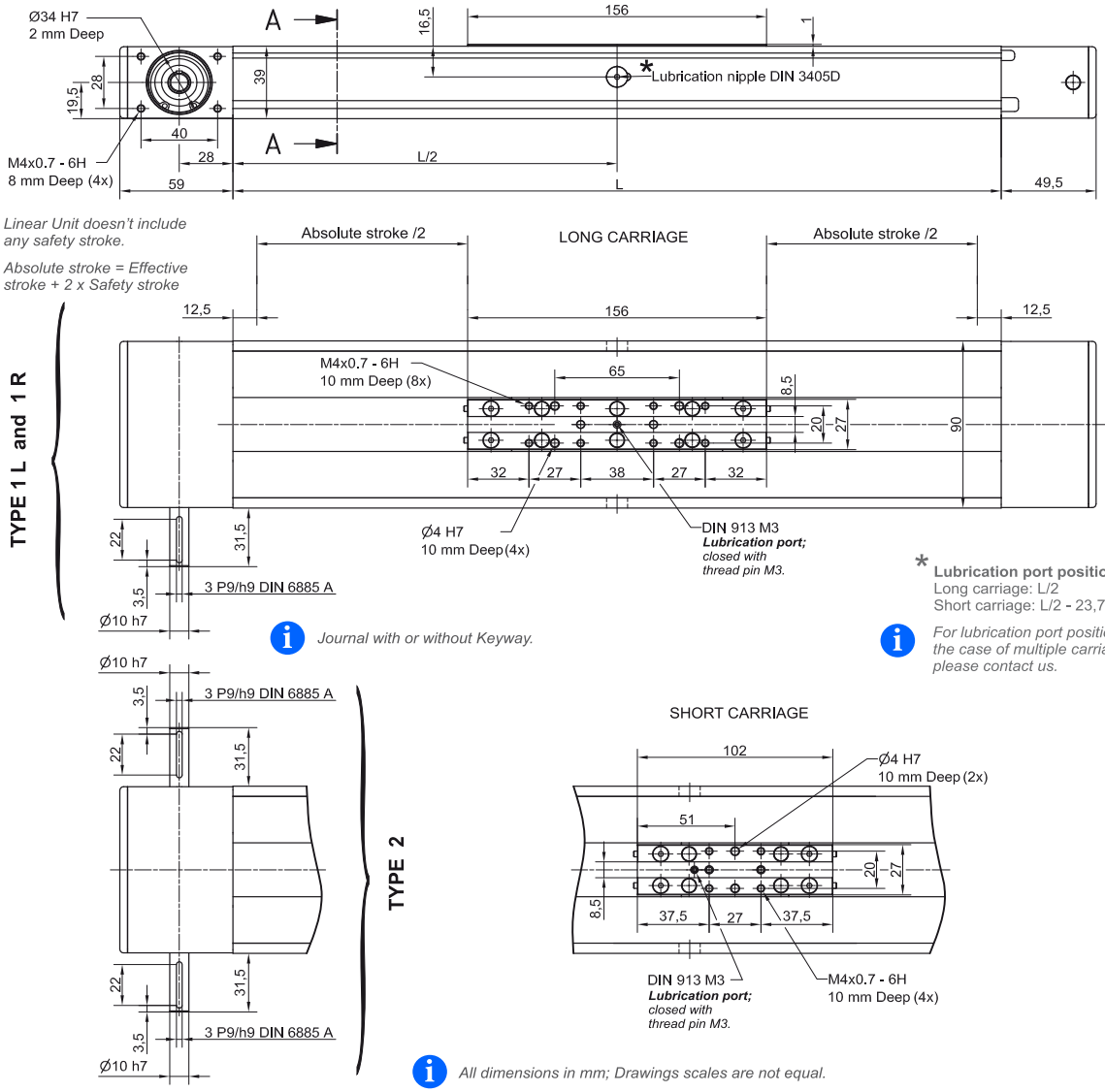

Defining of the linear unit length

L = Effective stroke + 2 × Safety stroke + Lv + A × (nc - 1) + 25 mm

Ltotal= L + 108,5 mm

nc - Number of carriages

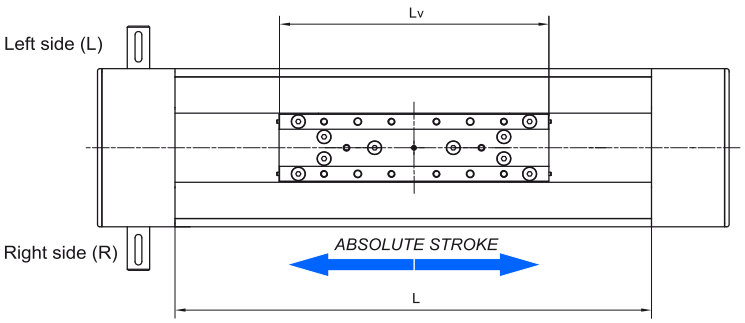

Lv - Long carriage = 156 mm
Lv - Short carriage = 102 mm

Multiple carriages

A ≥ Lv

Carriages are connected inside the profile with an aluminium plate (or a toothed belt for the case of longer distances A)

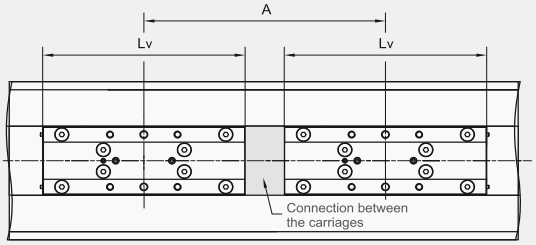

For the case of A [mm] > Alim :

- a toothed belt for the connection of the carriages will be used,
- the following condition must be met:

A [mm] = Alim + 3 × i,

where i ∈ {1,2,3,...}.

	CTJ 90 S	CTJ 90 L
Alim [mm]	401,5	455,5

DIMENSIONS

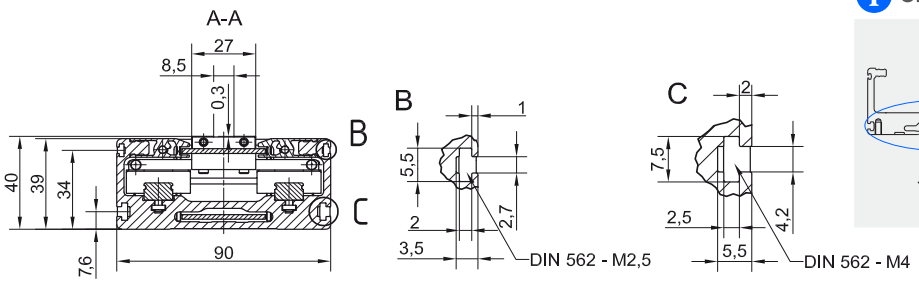

OPTIONAL: TAP / PIN holes available on request.

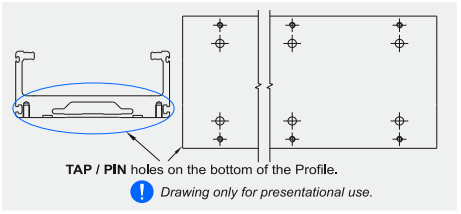

All dimensions in mm; Drawings scales are not equal.

CONNECTION PLATE

CTJ 90 L

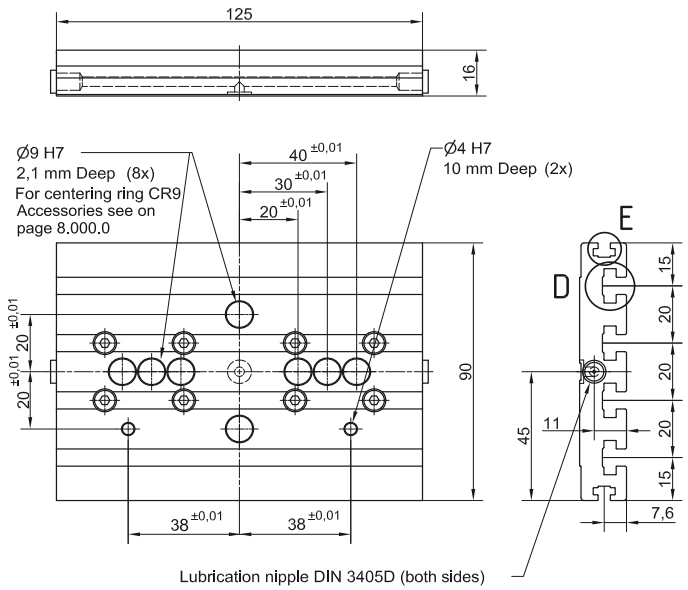

CTJ 90 S

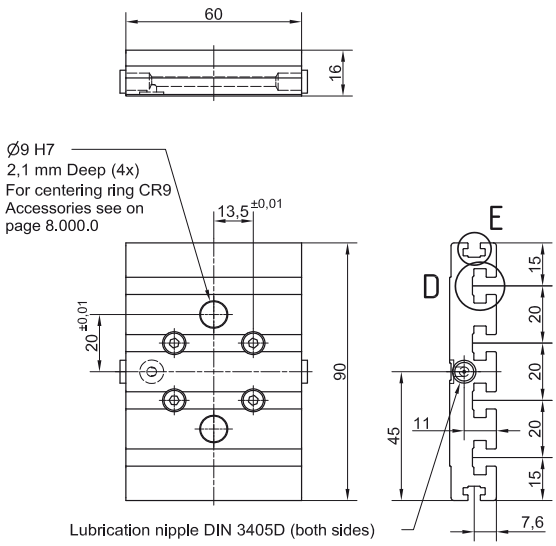

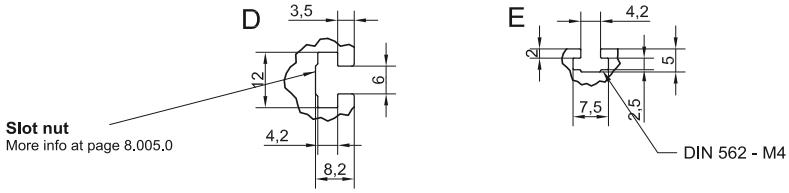

Linear Unit	Plate length [mm]	Weight [kg]	Code
CTJ 90 S	60	0,2	103661
CTJ 90 L	125	0,4	103660

Mounting elements for mounting the connection plate on the Linear unit are inlcuded.

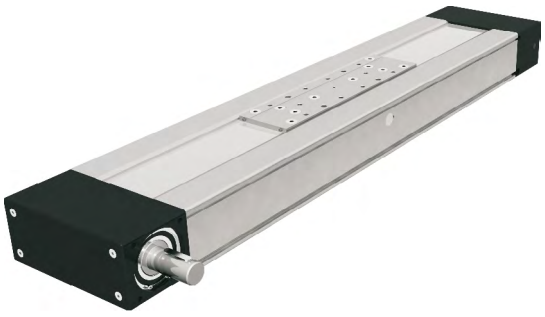

Mounting the drive

- by the **MOTOR ADAPTER WITH COUPLING** *(Page 8.020.0)*

Available on request.

In order to improve the products in this catalogue the specifications are subject to change without notice.

TECHNICAL DATA

General technical data

Linear Unit	Carriage length	Dynamic load capacity	Dynamic moment			Max. permissible loads Forces		Max. permissible loads Moments			Moved mass	Max. Repeatability	* Max. length	* Max. stroke	** Min. stroke
	Lv [mm]	C [N]	Mx [Nm]	My [Nm]	Mz [Nm]	Fpy [N]	Fpz [N]	Mpx [Nm]	Mpy [Nm]	Mpz [Nm]	[kg]	[mm]	Lmax [mm]	[mm]	[mm]
CTJ 110 S	170	19800	610	118	235	6470	8390	260	90	90	0,64	± 0,08	6000	5805	40
CTJ 110 L	215	39600	1225	1680	1680	13080	18820	525	880	550	0,98	± 0,08		5760	40

*For lengths / stroke over the stated value in the table above please contact us.
Values for max. stroke are not valid for multiple carriages
(equation of defining the linear unit length for particular size of the linear unit needs to be used).

**For minimum stroke below the stated value in the table above please contact us.

Operating conditions	
Operating temp.	0°C ~ +60°C
Duty cycle	100%

For operating temperature out of the presented range, please contact us.

Recommended values of loads

All the data of dynamic moments and load capacities stated in the upper table are theoretical without considering any safety factor. The safety factor depends on the application and its requested safety. We recommend a minimum safety factor (fs =5.0)

Modulus of elasticity

$E = 70000\ N / mm^2$

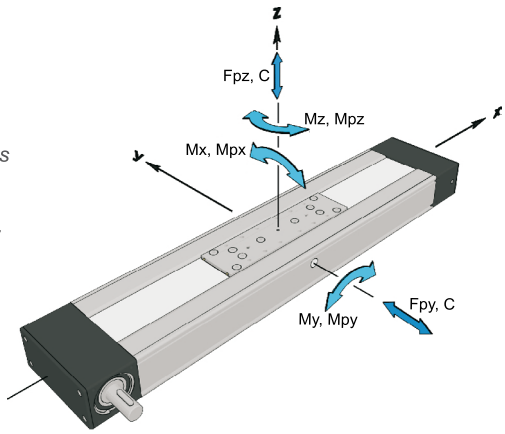

General technical data for double carriage

Linear Unit	Carriage version	Dynamic load capacity	* Dynamic moment			* Max. permissible loads Forces		Max. permissible loads Moments		
		C [N]	Mx [Nm]	My [Nm]	Mz [Nm]	Fpy [N]	Fpz [N]	Mpx [Nm]	Mpy [Nm]	Mpz [Nm]
CTJ 110	S2	39600	1220	19,8 × A	19,8 × A	12940	16770	520	8,4 × A	6,5 × A
	L2	79200	2450	39,6 × A	39,6 × A	26150	37600	1050	18,8 × A	13,1 × A

*A - Distance between carriages [mm]. More info on following pages.

Presented values are for informational purposes only. Exact values can be calculated using our sizing selection tool on Unimotion web site.

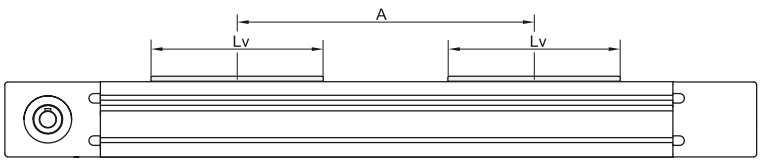

Drive and belt data

Linear Unit	** Max. travel speed	Max. drive torque	* No load torque	Puley drive ratio	Pulley diameter	Belt type	Belt width	Max. force transmited by belt	Specific spring constant Cspec	** Max. acceleration
	[m / s]	[Nm]	[Nm]	[mm / rev]	[mm]		[mm]	[N]	[N]	[m/s²]
CTJ 110 S	6	15,7	0,98 × nc	120	38,20	AT 5	50	820	960000	70
CTJ 110 L			1,00 × nc							

*The stated values are for strokes (and distances between the carriages A) up to 500mm. No Load Torque value increases with stroke (and with A) elongation.
nc - Number of carriages

**For travel speed and acceleration over the stated value in the table above please contact us.

TECHNICAL DATA

Mass and mass moment of inertia

Linear Unit	Mass of linear unit [kg]	Mass moment of inertia [10^{-5} kg m^2]	Planar moment of inertia	
			Iy [cm^4]	Iz [cm^4]
CTJ 110 S	3,6 + 0,0072 × (Abs. stroke + (nc - 1) × A) + 0,64 × (nc - 1)	36 + 0,0125 × (Abs. stroke + (nc - 1) × A) + 23,3 × (nc - 1)	31,1	217,2
CTJ 110 L	4,2 + 0,0072 × (Abs. stroke + (nc - 1) × A) + 0,98 × (nc - 1)	49 + 0,0125 × (Abs. stroke + (nc - 1) × A) + 35,8 × (nc - 1)		

*Absolute stroke [mm]
A - Distance between carriages [mm]. More info on following pages.
nc - Number of carriages

Mass calculation doesn´t include mass of motor, reduction gear, switches and clamps.

Deflection of the linear unit

Fixed - fixed mounting

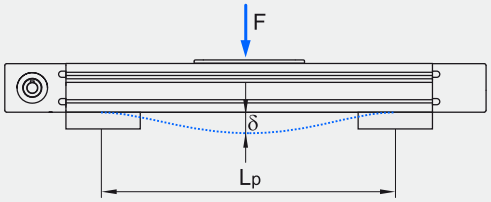

Fixed - free mounting

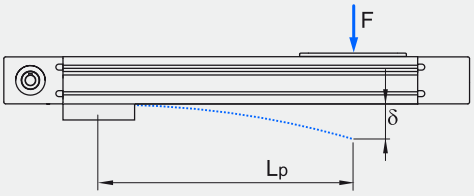

δ Maximum deflection of the linear unit [mm]
δmax Maximum permissible deflection of the linear unit [mm]
F Applied force [N]
Lp Unsupported profile length [mm]

The maximum permissible deflection δmax must not be exceeded. In the case that maximum deflection δ exceeds the maximum permissible deflection δmax additional profile supports are needed.

CTJ 110

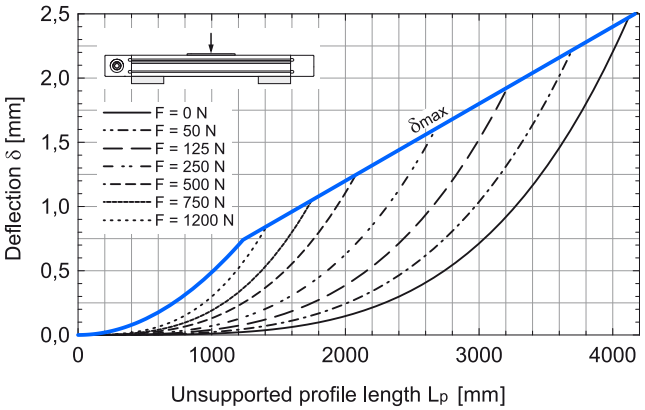

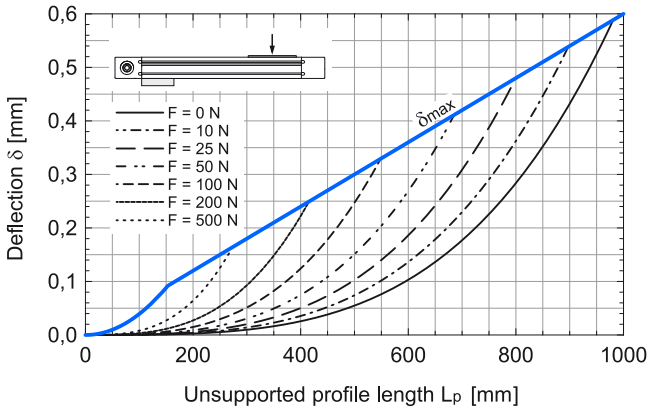

In order to improve the products in this catalogue the specifications are subject to change without notice.

DIMENSIONS

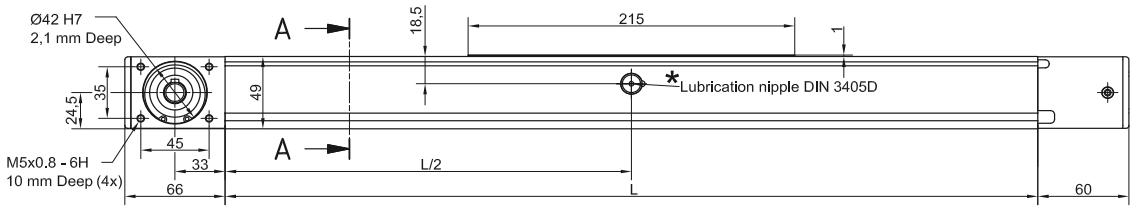

Linear Unit doesn't include any safety stroke.

Absolute stroke = Effective stroke + 2 x Safety stroke

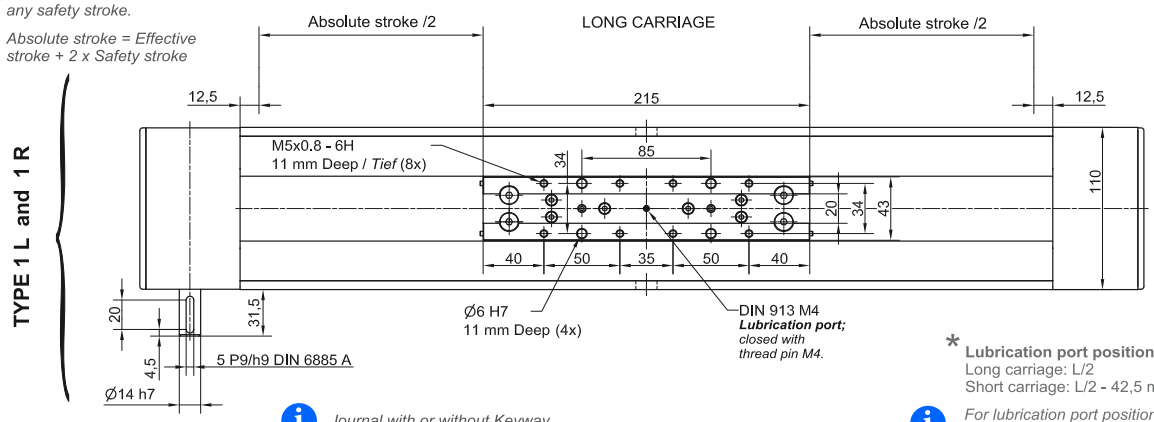

*** Lubrication port position**:
Long carriage: L/2
Short carriage: L/2 - 42,5 mm

Journal with or without Keyway.

For lubrication port positions in the case of multiple carriages please contact us.

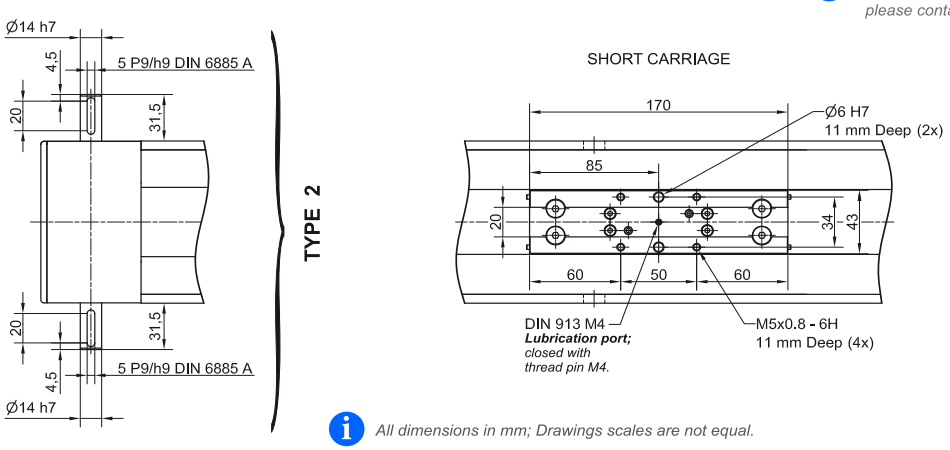

All dimensions in mm; Drawings scales are not equal.

Defining of the linear unit length

L = Effective stroke + 2 × Safety stroke + Lv + A × (nc - 1) + 25 mm

Ltotal = L + 126 mm

nc - Number of carriages

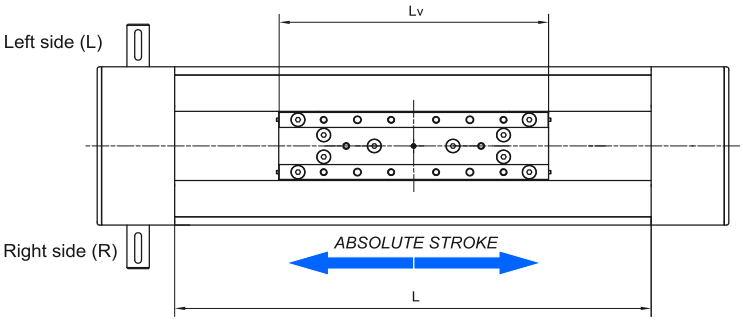

Lv - Long carriage = 215 mm
Lv - Short carriage = 170 mm

Multiple carriages

A ≥ Lv

Carriages are connected inside the profile with an aluminium plate (or a toothed belt for the case of longer distances A)

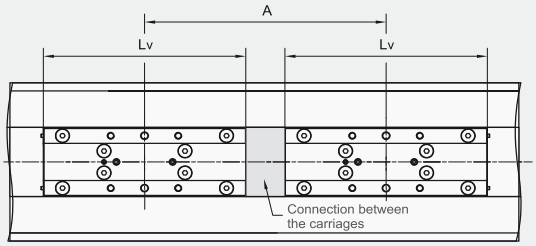

For the case of A [mm] > Alim :

- a toothed belt for the connection of the carriages will be used,
- the following condition must be met:

A [mm] = Alim + 5 × i,

where i ∈ {1,2,3,...}.

	CTJ 110 S	CTJ 110 L
Alim [mm]	601	646

DIMENSIONS

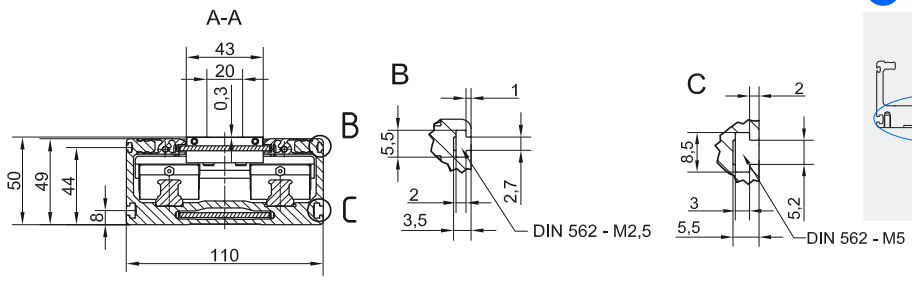

OPTIONAL: TAP / PIN holes available on request.

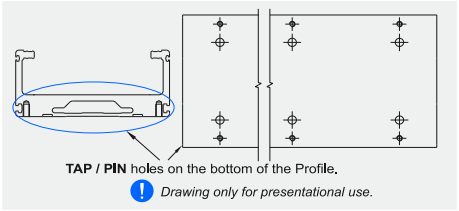

All dimensions in mm; Drawings scales are not equal.

CONNECTION PLATE

CTJ 110 L

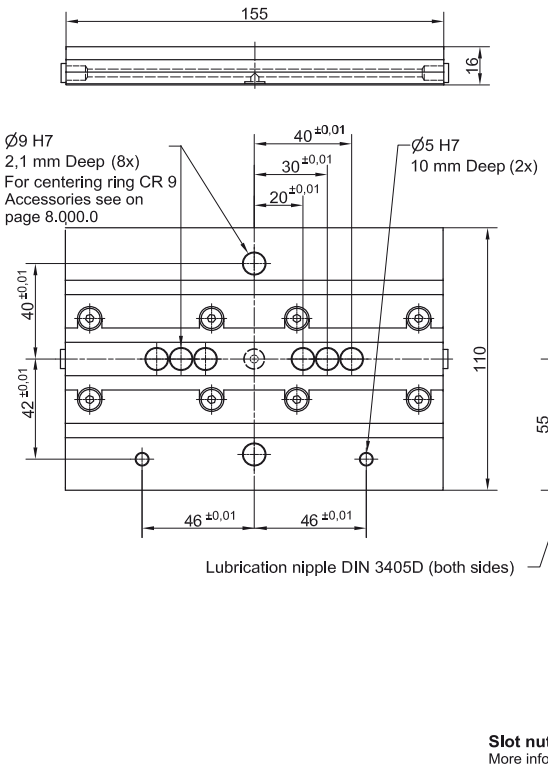

CTJ 110 S

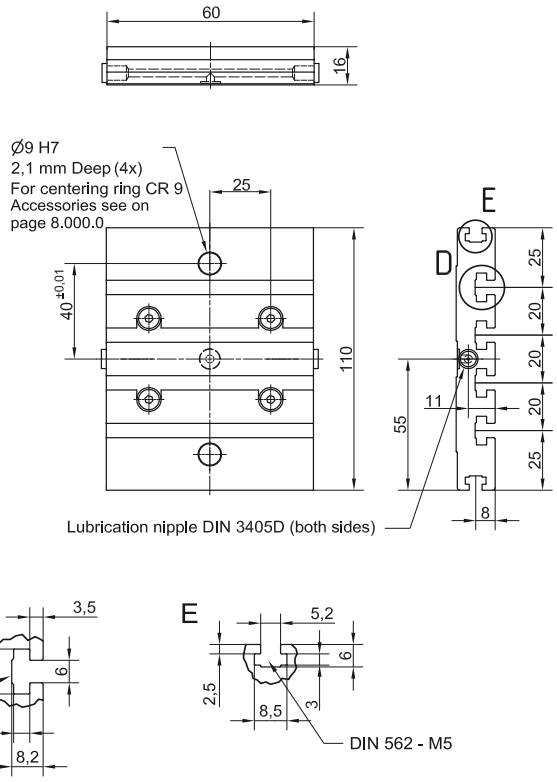

Linear Unit	Plate length [mm]	Weight [kg]	Code
CTJ 110 S	60	0,35	103663
CTJ 110 L	155	0,60	103662

Mounting elements for mounting the connection plate on the Linear unit are inlcuded.



Mounting the drive

- by the **MOTOR ADAPTER WITH COUPLING** *(Page 8.020.0)*

Available on request.

In order to improve the products in this catalogue the specifications are subject to change without notice.

TECHNICAL DATA

General technical data

Linear Unit	Carriage length Lv [mm]	Dynamic load capacity C [N]	Dynamic moment Mx [Nm]	My [Nm]	Mz [Nm]	Max. permissible loads Forces Fpy [N]	Fpz [N]	Moments Mpx [Nm]	Mpy [Nm]	Mpz [Nm]	Moved mass [kg]	Max. Repeatability [mm]	* Max. length Lmax [mm]	* Max. stroke [mm]	** Min. stroke [mm]
CTJ 145 S	180	34200	1500	260	520	8930	15320	674	260	180	1,35	± 0,08	6000	5795	55
CTJ 145 L	240	68400	3005	3420	3420	17870	30640	1200	1700	893	2,25	± 0,08		5735	55

*For lengths / stroke over the stated value in the table above please contact us.
Values for max. stroke are not valid for multiple carriages
(equation of defining the linear unit length for particular size of the linear unit needs to be used).

**For minimum stroke below the stated value in the table above please contact us.

Operating conditions	
Operating temp.	0°C ~ +60°C
Duty cycle	100%

For operating temperature out of the presented range, please contact us.

Recommended values of loads

All the data of dynamic moments and load capacities stated in the upper table are theoretical without considering any safety factor. The safety factor depends on the application and its requested safety. We recommend a minimum safety factor (fs =5.0)

Modulus of elasticity

E = 70000 N / mm²

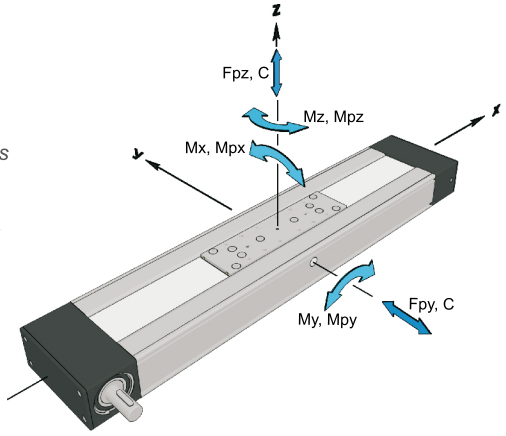

General technical data for double carriage

Linear Unit	Carriage version	Dynamic load capacity C [N]	* Dynamic moment Mx [Nm]	My [Nm]	Mz [Nm]	* Max. permissible loads Forces Fpy [N]	Fpz [N]	Moments Mpx [Nm]	Mpy [Nm]	Mpz [Nm]
CTJ 145	S2	68400	3000	34,2 × A	34,2 × A	17870	30640	1350	15,3 × A	8,9 × A
	L2	136800	6000	68,4 × A	68,4 × A	35700	61200	2400	30,6 × A	17,8 × A

*A - Distance between carriages [mm]. More info on following pages.

Presented values are for informational purposes only. Exact values can be calculated using our sizing selection tool on Unimotion web site.

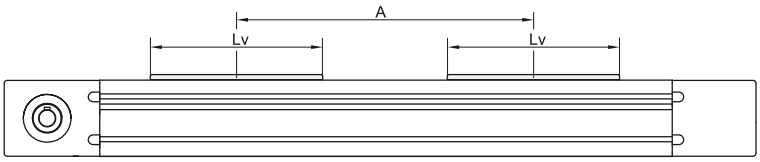

Drive and belt data

Linear Unit	** Max. travel speed [m / s]	Max. drive torque [Nm]	* No load torque [Nm]	Puley drive ratio [mm / rev]	Pulley diameter [mm]	Belt type	Belt width [mm]	Max. force transmited by belt [N]	Specific spring constant Cspec [N]	** Max. acceleration [m/s²]
CTJ 145 S	6	33,6	1,48 × nc	165	52,52	AT 5	70	1280	1360000	70
CTJ 145 L			1,50 × nc							

*The stated values are for strokes (and distances between the carriages A) up to 500mm. No Load Torque value increases with stroke (and with A) elongation.
nc - Number of carriages

**For travel speed and acceleration over the stated value in the table above please contact us.

TECHNICAL DATA

Mass and mass moment of inertia

Linear Unit	Mass of linear unit [kg]	Mass moment of inertia [10^{-5} kg m^2]	Planar moment of inertia Iy [cm^4]	Iz [cm^4]
CTJ 145 S	7,2 + 0,0127 × (Abs. stroke + (nc - 1) × A) + 1,35 × (nc - 1)	145 + 0,0330 × (Abs. stroke + (nc - 1) × A) + 93,1 × (nc - 1)	78,9	707,6
CTJ 145 L	8,8 + 0,0127 × (Abs. stroke + (nc - 1) × A) + 2,25 × (nc - 1)	208 + 0,0330 × (Abs. stroke + (nc - 1) × A) + 155,2 × (nc - 1)		

*Absolute stroke [mm]
A - Distance between carriages [mm]. More info on following pages.
nc - Number of carriages

Mass calculation doesn´t include mass of motor, reduction gear, switches and clamps.

Deflection of the linear unit

Fixed - fixed mounting

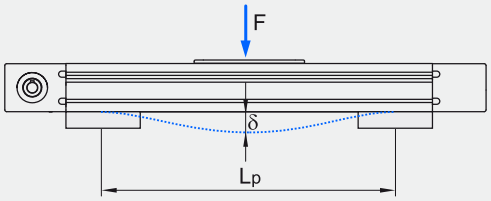

Fixed - free mounting

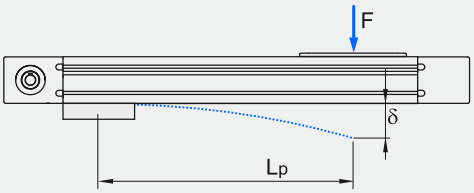

δ Maximum deflection of the linear unit [mm]
δmax Maximum permissible deflection of the linear unit [mm]
F Applied force [N]
Lp Unsupported profile length [mm]

The maximum permissible deflection δmax must not be exceeded. In the case that maximum deflection δ exceeds the maximum permissible deflection δmax additional profile supports are needed.

CTJ 145

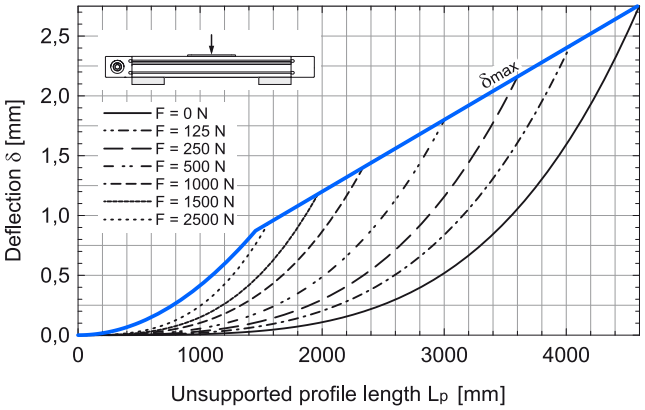

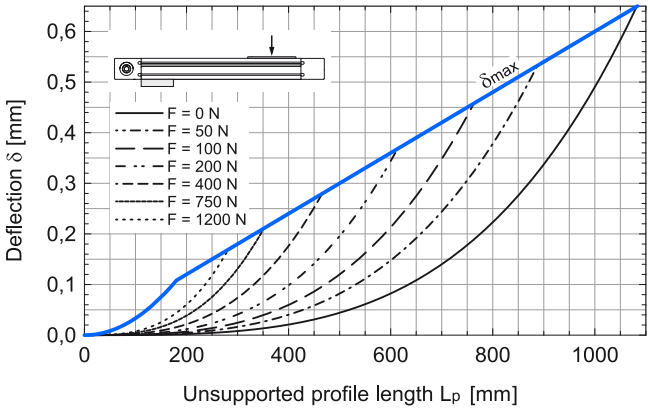

In order to improve the products in this catalogue the specifications are subject to change without notice.

DIMENSIONS

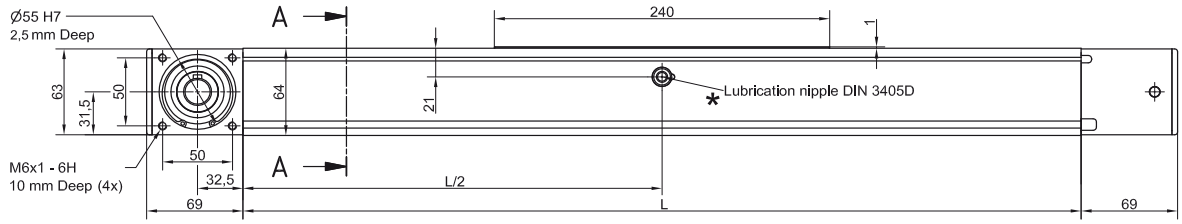

Linear Unit doesn't include any safety stroke.

Absolute stroke = Effective stroke + 2 x Safety stroke

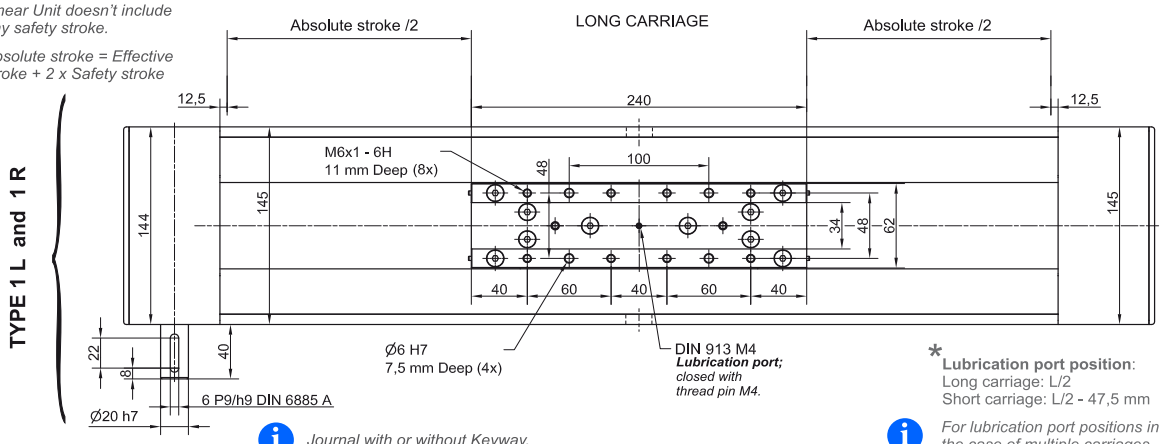

Journal with or without Keyway.

*** Lubrication port position:**
Long carriage: L/2
Short carriage: L/2 - 47,5 mm

For lubrication port positions in the case of multiple carriages please contact us.

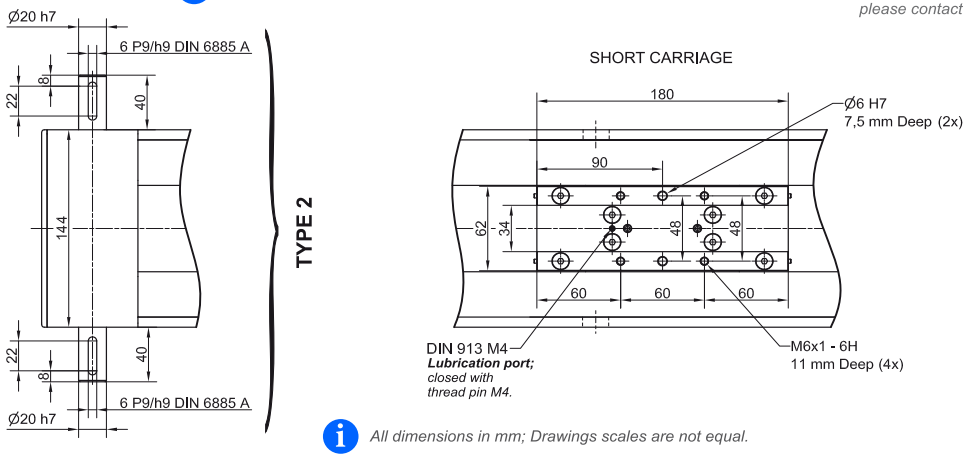

All dimensions in mm; Drawings scales are not equal.

Defining of the linear unit length

L = Effective stroke + 2 × Safety stroke + Lv + A × (nc - 1) + 25 mm

Ltotal = L + 138 mm

nc - Number of carriages

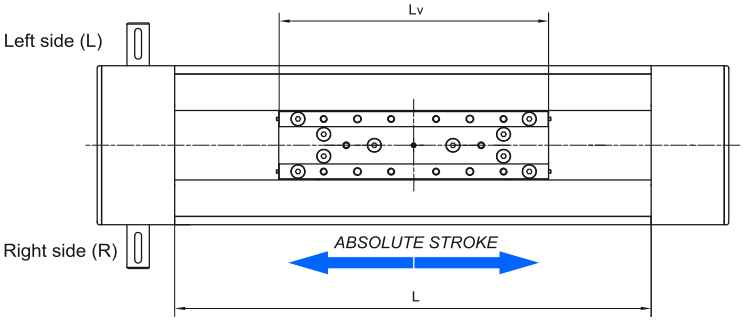

Lv - Long carriage = 240 mm
Lv - Short carriage = 180 mm

Multiple carriages

A ≥ Lv

Carriages are connected inside the profile with an aluminium plate (or a toothed belt for the case of longer distances A)

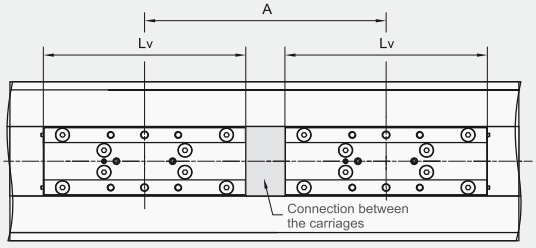

For the case of A [mm] > Alim :

- a toothed belt for the connection of the carriages will be used,
- the following condition must be met:

A [mm] = Alim + 5 × i,

where i ∈ {1,2,3,...}.

	CTJ 145 S	CTJ 145 L
Alim [mm]	801	861

DIMENSIONS

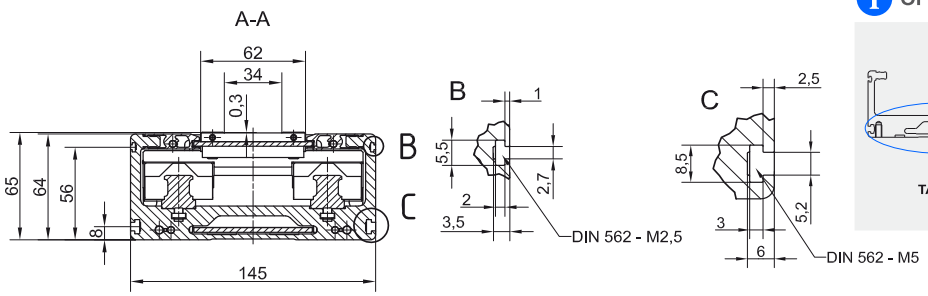

OPTIONAL: TAP / PIN holes available on request.

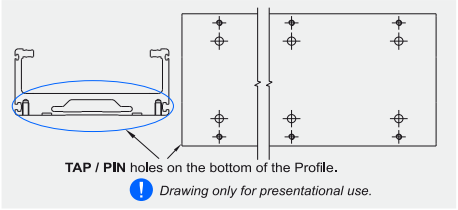

All dimensions in mm; Drawings scales are not equal.

CONNECTION PLATE

CTJ 145 L

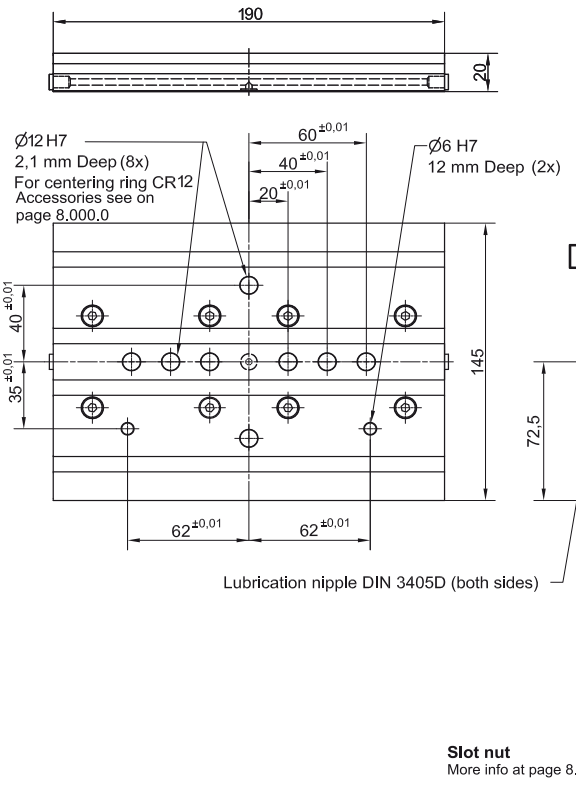

CTJ 145 S

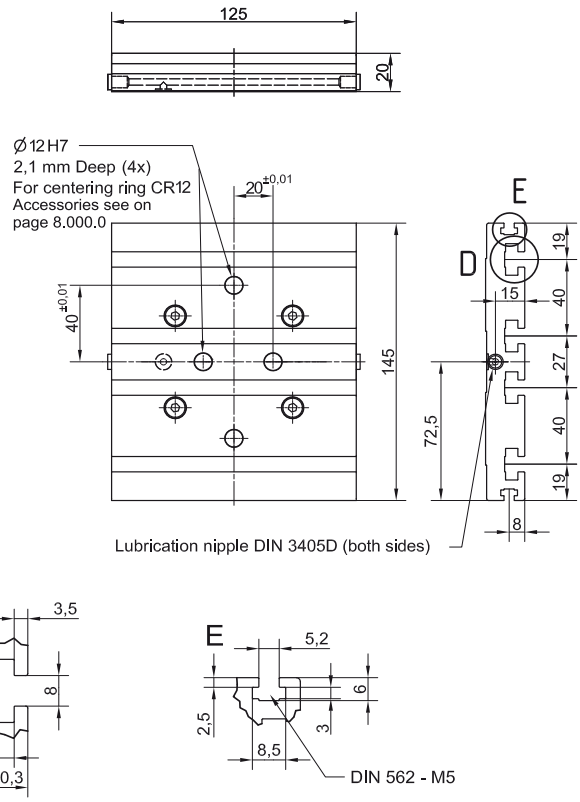

Linear Unit	Plate length [mm]	Weight [kg]	Code
CTJ 145 S	125	0,8	103665
CTJ 145 L	190	1,3	103664

Mounting elements for mounting the connection plate on the Linear unit are inlcuded.

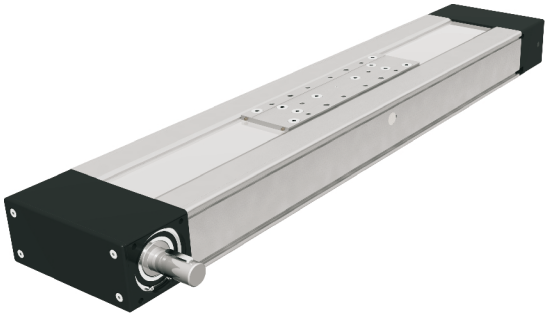

Mounting the drive

- by the **MOTOR ADAPTER WITH COUPLING** *(Page 8.020.0)*

Available on request.

In order to improve the products in this catalogue the specifications are subject to change without notice.

TECHNICAL DATA

General technical data

Linear Unit	Carriage length	Dynamic load capacity	Dynamic moment			Max. permissible loads Forces		Moments			Moved mass	Max. Repeatability	* Max. length	* Max. stroke	** Min. stroke
	Lv [mm]	C [N]	Mx [Nm]	My [Nm]	Mz [Nm]	Fpy [N]	Fpz [N]	Mpx [Nm]	Mpy [Nm]	Mpz [Nm]	[kg]	[mm]	Lmax [mm]	[mm]	[mm]
CTJ 200 S	265	49600	3235	450	900	10000	24520	1600	450	308	3,05	± 0,08	6000	5710	65
CTJ 200 L	405	99200	6470	8680	8680	20000	50900	3250	4550	1750	5,70	± 0,08		5570	65

*For lengths / stroke over the stated value in the table above please contact us.
Values for max. stroke are not valid for multiple carriages
(equation of defining the linear unit length for particular size of the linear unit needs to be used).

**For minimum stroke below the stated value in the table above please contact us.

Operating conditions	
Operating temp.	0°C ~ +60°C
Duty cycle	100%

For operating temperature out of the presented range, please contact us.

Recommended values of loads

All the data of dynamic moments and load capacities stated in the upper table are theoretical without considering any safety factor. The safety factor depends on the application and its requested safety. We recommend a minimum safety factor (fs =5.0)

Modulus of elasticity

E = 70000 N / mm²

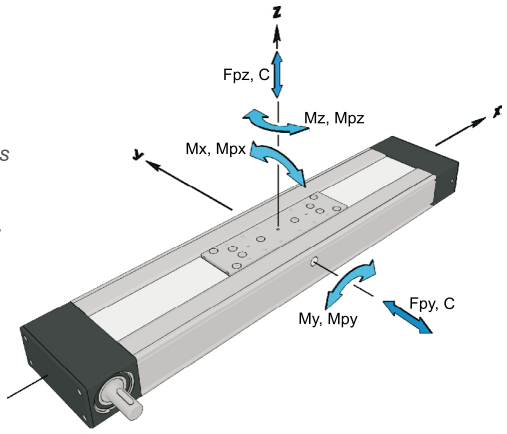

General technical data for double carriage

Linear Unit	Carriage version	Dynamic load capacity	* Dynamic moment			* Max. permissible loads Forces		Moments		
		C [N]	Mx [Nm]	My [Nm]	Mz [Nm]	Fpy [N]	Fpz [N]	Mpx [Nm]	Mpy [Nm]	Mpz [Nm]
CTJ 200	S2	99200	6470	49,6 × A	49,6 × A	20000	49040	3200	24,5 × A	10,0 × A
	L2	198400	12940	99,2 × A	99,2 × A	40000	101800	6500	50,9 × A	20,0 × A

*A - Distance between carriages [mm]. More info on following pages.

Presented values are for informational purposes only. Exact values can be calculated using our sizing selection tool on Unimotion web site.

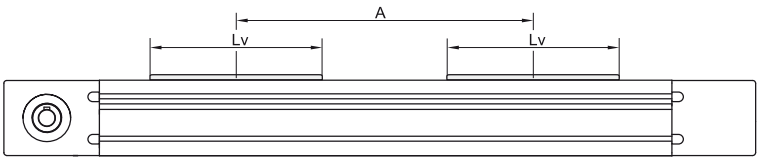

Drive and belt data

Linear Unit	** Max. travel speed	Max. drive torque	* No load torque	Puley drive ratio	Pulley diameter	Belt type	Belt width	Max. force transmited by belt	Specific spring constant Cspec	** Max. acceleration
	[m / s]	[Nm]	[Nm]	[mm / rev]	[mm]		[mm]	[N]	[N]	[m/s²]
CTJ 200 S	6	102 with keyway	3,5 × nc	250	79,58	AT 10	100	2850	4350000	70
CTJ 200 L		113 without keyway	4,5 × nc							

*The stated values are for strokes (and distances between the carriages A) up to 500mm. No Load Torque value increases with stroke (and with A) elongation.
nc - Number of carriages

**For travel speed and acceleration over the stated value in the table above please contact us.

TECHNICAL DATA

Mass and mass moment of inertia

Linear Unit	Mass of linear unit [kg]	Mass moment of inertia [10^{-5} kg m^2]	Planar moment of inertia	
			Iy [cm^4]	Iz [cm^4]
CTJ 200 S	20,2 + 0,0245 × (Abs. stroke + (nc - 1) × A) + 3,1 × (nc - 1)	778 + 0,1868 × (Abs. stroke + (nc - 1) × A) + 482,9 × (nc - 1)	376,4	2744,6
CTJ 200 L	26,2 + 0,0245 × (Abs. stroke + (nc - 1) × A) + 5,7 × (nc - 1)	1210 + 0,1868 × (Abs. stroke + (nc - 1) × A) + 902,4 × (nc - 1)		

*Absolute stroke [mm]
A - Distance between carriages [mm]. More info on following pages.
nc - Number of carriages

Mass calculation doesn´t include mass of motor, reduction gear, switches and clamps.

Deflection of the linear unit

Fixed - fixed mounting

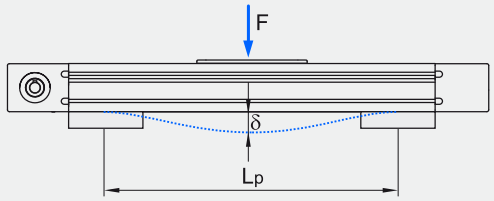

Fixed - free mounting

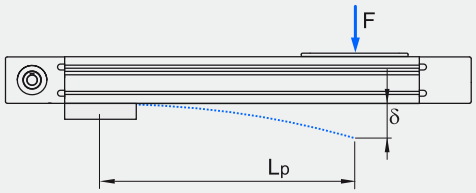

δ Maximum deflection of the linear unit [mm]
δmax Maximum permissible deflection of the linear unit [mm]
F Applied force [N]
Lp Unsupported profile length [mm]

The maximum permissible deflection δmax must not be exceeded. In the case that maximum deflection δ exceeds the maximum permissible deflection δmax additional profile supports are needed.

CTJ 200

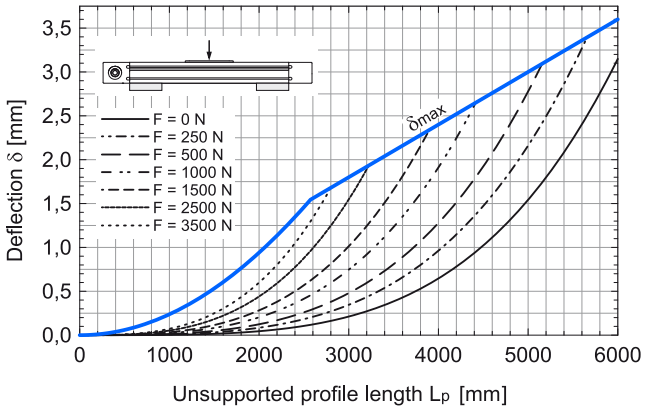

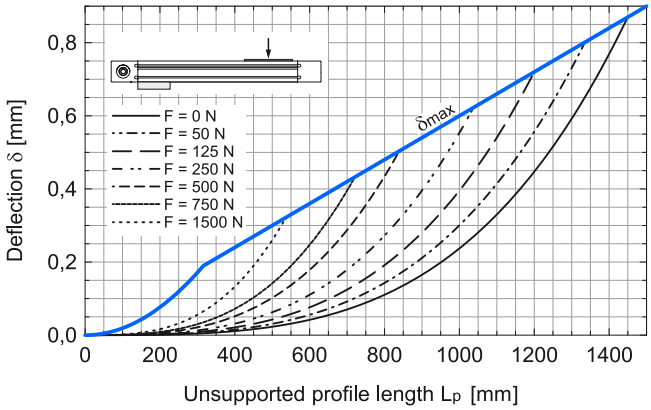

In order to improve the products in this catalogue the specifications are subject to change without notice.

DIMENSIONS

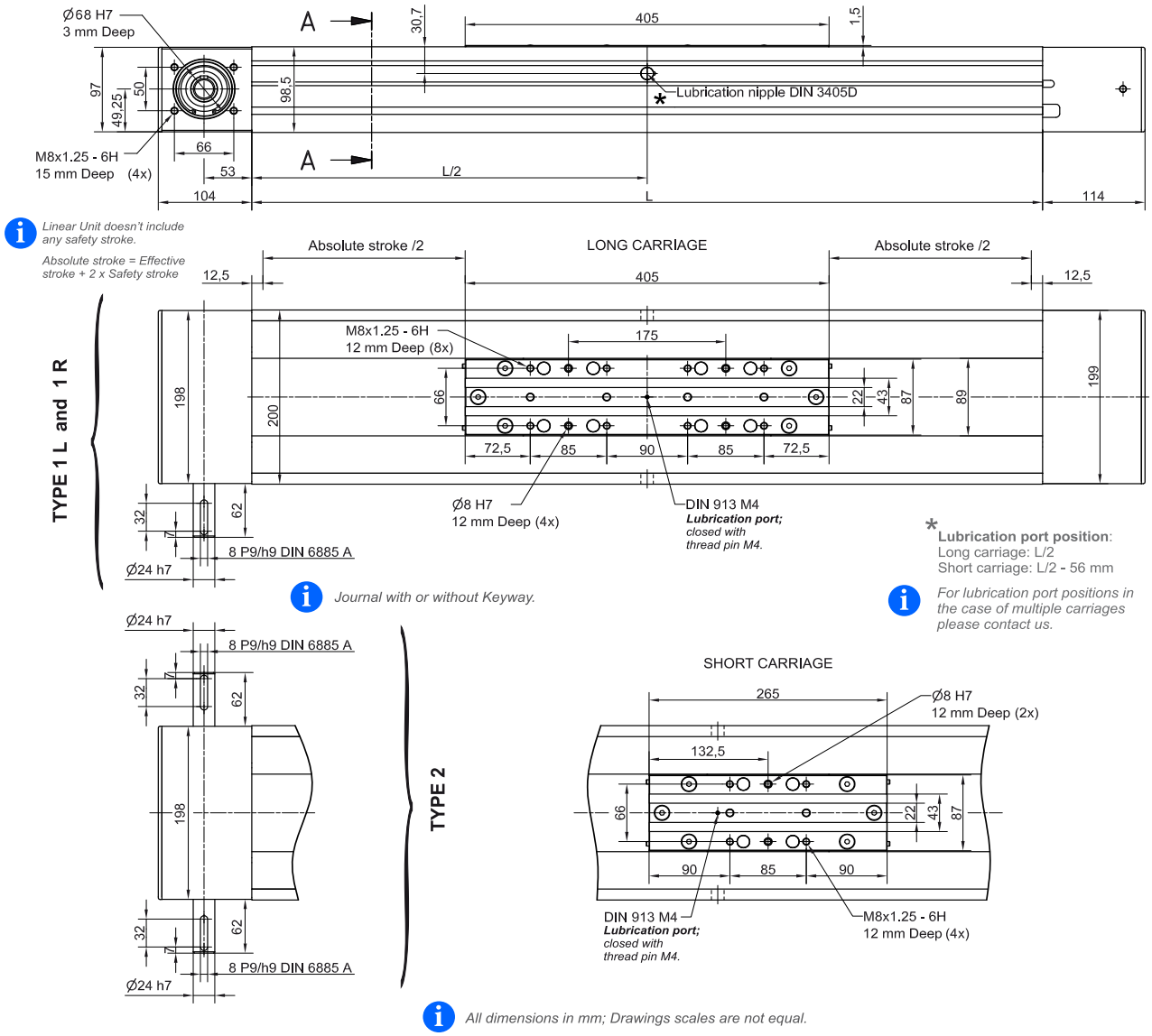

Defining of the linear unit length

L = Effective stroke + 2 × Safety stroke + Lv + A × (nc - 1) + 25 mm

Ltotal= L + 218 mm

nc - Number of carriages

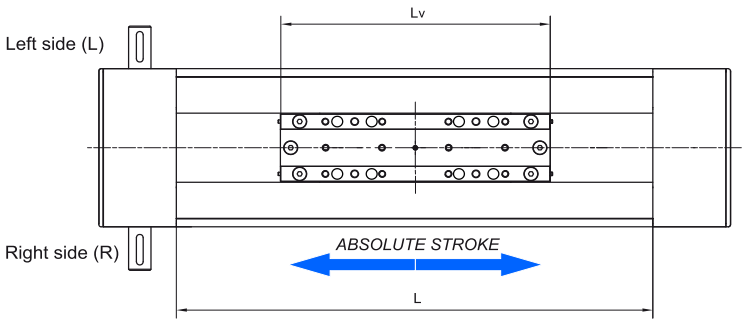

Lv - Long carriage = 405 mm
Lv - Short carriage = 265 mm

Multiple carriages

A ≥ Lv

Carriages are connected inside the profile with an aluminium plate (or a toothed belt for the case of longer distances A)

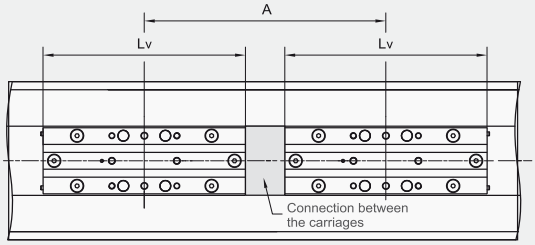

For the case of A [mm] > Alim :

- a toothed belt for the connection of the carriages will be used,
- the following condition must be met:

A [mm] = Alim + 10 × i,

where i ∈ {1,2,3,...}.

	CTJ 200 S	CTJ 200 L
Alim [mm]	1006	1146

DIMENSIONS

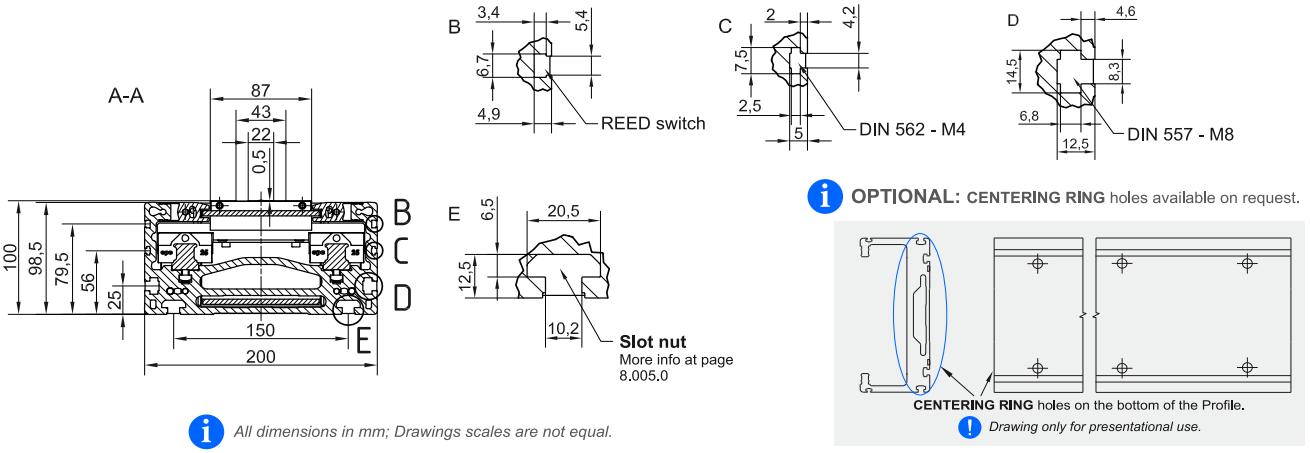

All dimensions in mm; Drawings scales are not equal.

OPTIONAL: **CENTERING RING** holes available on request.

Drawing only for presentational use.

CONNECTION PLATE

CTJ 200 L

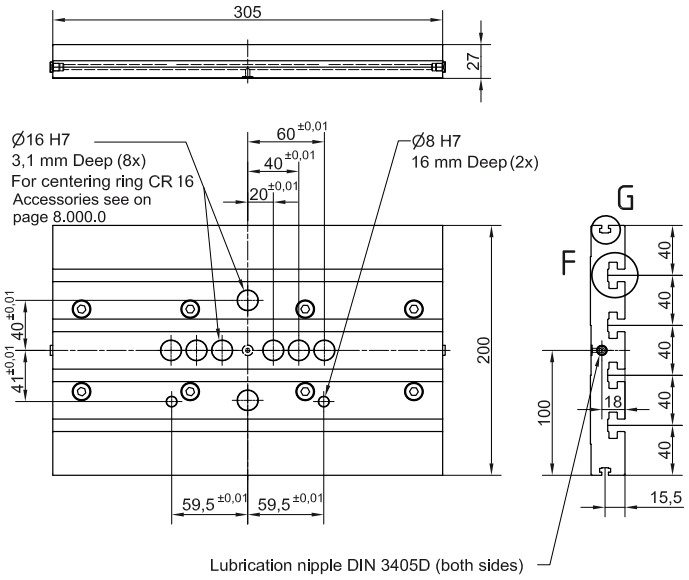

CTJ 200 S

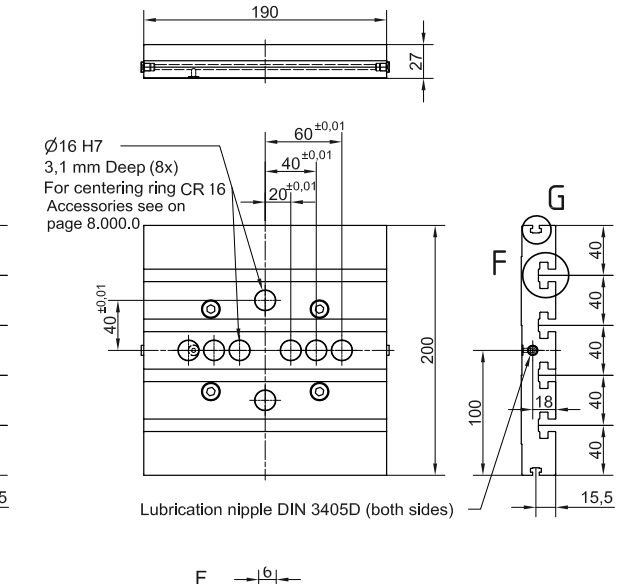

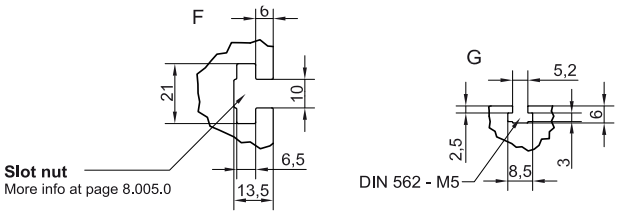

Linear Unit	Plate length [mm]	Weight [kg]	Code
CTJ 200 S	190	2,3	103667
CTJ 200 L	305	3,7	103666

Mounting elements for mounting the connection plate on the Linear unit are inlcuded.



Mounting the drive

- by the **MOTOR ADAPTER WITH COUPLING** *(Page 8.020.0)*

Available on request.

In order to improve the products in this catalogue the specifications are subject to change without notice.

CTV

CHARACTERISTICS

The **CTV** series describes Linear Units with a precision ball screw drive and two parallel, integrated, Zero-backlash rail guides. Compact dimensions allow high performance features such as, high speeds, good accuracy and repeatability.
They can easily be combined to multi-axis systems.
Excellent price-/performance ratio and quick delivery time are ensured.
The compact, precision-extruded aluminum Profile from AL 6063, with two parallel, integrated, Zero-backlash rail guide systems, allows high load capacities and optimal cycles for the movement of larger masses at high speed.
In the Linear Units CTV a precision ball screw, with tolerance class ISO7 (ISO5 on request), with reduced backlash of the ball nut is used.
Two parallel circulating antistatic polyurethane sealing strips and an aluminum cover are ensuring to protect all the parts in the profile from dust and other contaminantions.
Different carriage lengths with lubrication port allows for easy re-lubrication of the ball screw and Ball rail guide system and allows the possibility to attach additional accessories. The re-lubrication can also be done through maintenance holes on the side of the Profile.
The aluminum profile includes T-slots for fixing the Linear Unit and for attaching sensors and switches. Also, a Reed switch can be used here.
For the linear units CTV various adaptation options, for attaching (or redirecting), for Motors or Gearboxes are available.



The aluminium profiles are manufactured according to the medium EN 12020-2 standard

Straightness = 0,35 mm/m; Max. torsion = 0,35 mm/m; Angular torsion = 0,2 mm/40 mm; Parallelism = 0,2 mm

In order to improve the products in this catalogue the specifications are subject to change without notice.

STRUCTURAL DESIGN

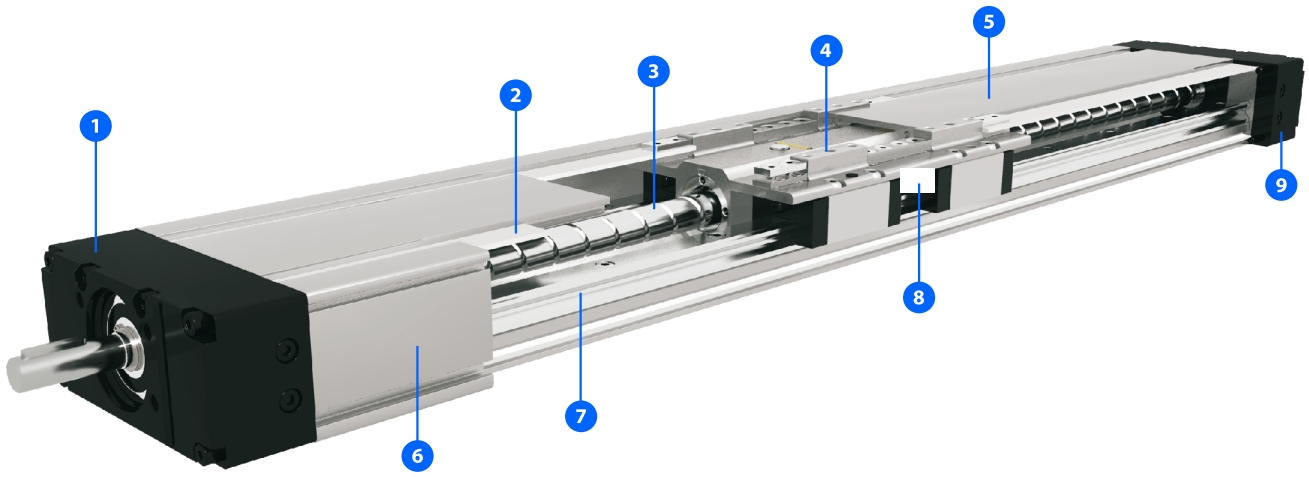

1 - Drive block with floating bearing
2 - Gap-type seal of antistatic PU strip (recirculating)
3 - Ball screw tolerance ISO7 (ISO5 available on request)
4 - Carriage; with built in Magnets
5 - Aluminum cover
6 - Aluminium profile-Hard anodized
7 - Two integrated Linear Ball Guideways
8 - Central lubrication port; both sides
9 - End block with fixed bearing

HOW TO ORDER

CTV - 110 - 1610 - ISO7 - 0 - 700 - S2 - 200 - 1 - 1

Series:
CTV

Size:
90
110
145
200

Ball screw :
CTV 90: Ø12×5, Ø12×10
CTV 110: Ø16×5, Ø16×10, Ø16×16
CTV 145: Ø20×5, Ø20×10, Ø20×20, Ø20×50
CTV 200: Ø32×5, Ø32×10, Ø32×20, Ø32×32

Ball screw tolerance :
ISO7 (Standard)
ISO5

Ball screw journal :
0 : Without keyway
1 : With keyway
*CTV 90 only available without keyway - **0***

Absolute stroke [mm] :
(Absolute stroke = Effective stroke + 2 x Safety stroke)

Carriage Version :
S : Short
L : Long

Number of carriages :
The stated number specifies the number of carriages on one Linear unit (up to 5 carriages avaliable)
Leave blank : For the case of one carriage
Connection between the carriages is not rigid

Distance between two carriages [mm] :
Leave blank : For the case of one carriage

Connection plate :
0 : Without
1 : With

Protection cover :
0 : Without antistatic PU Gap-type seal strip
1 : With antistatic PU Gap-type seal strip (Standard)
2 : With Corrosion-resistant protection strip

In order to improve the products in this catalogue the specifications are subject to change without notice.

TECHNICAL DATA

General technical data

Linear Unit	Carriage length	Dynamic load capacity	Dynamic moment			Max. permissible loads					Moved mass	* Max. length	* Max. stroke
						Forces		Moments					
	L_V [mm]	C [N]	Mx [Nm]	My [Nm]	Mz [Nm]	Fpy [N]	Fpz [N]	Mpx [Nm]	Mpy [Nm]	Mpz [Nm]	[kg]	L_{max} [mm]	[mm]
CTV 90 S	35	4620	125	17	34	2000	4540	125	17	34	0,3	750	665
CTV 90 L	100	9240	250	300	300	3990	9090	250	297	130	0,5		600

*For lengths / stroke over the stated value in the table above please contact us.
Values for max. stroke are not valid for multiple carriages
(equation of defining the linear unit length for particular size of the linear unit needs to be used).

Recommended values of loads:

All the data of dynamic moments and load capacities stated in the upper table are theoretical without considering any safety factor. The safety factor depends on the application and its requested safety. We recommend a minimum safety factor (fs =5.0)

Modulus of elasticity

E = 70000 N / mm^2

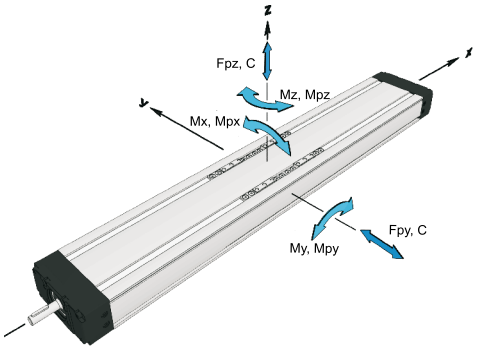

Operating conditions	
Operating temp.	0°C ~ +60°C
Duty cycle	100%

For operating temperature out of the presented range, please contact us.

General technical data for double carriage

Linear Unit	Carriage version	Dynamic load capacity	* Dynamic moment			* Max. permissible loads				
						Forces		Moments		
		C [N]	Mx [Nm]	My [Nm]	Mz [Nm]	Fpy [N]	Fpz [N]	Mpx [Nm]	Mpy [Nm]	Mpz [Nm]
CTV 90	S2	9240	250	4,6 × A	4,6 × A	3990	9090	250	4,5 × A	2,0 × A
	L2	18480	500	9,2 × A	9,2 × A	7980	18170	500	9,0 × A	4,0 × A

A - Distance between carriages [mm]. More info on following pages.

Presented values are for informational purposes only. Exact values can be calculated using our sizing selection tool on Unimotion web site.

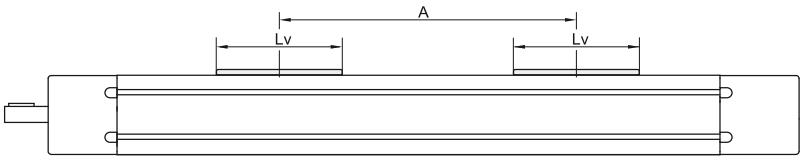

Ball Screw Drive data

Linear Unit	Ball screw	Max. rotational speed	1 Max. travel speed	2 No load torque		Lead constant	3 Max. repeteability precision [mm]		Dynamic load capacity BS	Max. Axial load	Max. drive torque	4 Min. stroke	1 Max. accele-ration
				Carriage: S	Carriage: L		STANDARD ISO7	ISO5					
	[d × l]	[rev / min]	[m / s]	[Nm]	[Nm]	[mm / rev]			Ca [N]	Fx [N]	Ma [Nm]	[mm]	[m/s^2]
CTV 90	12 × 5	5800	0,49	0,08 × nc	0,10 × nc	5	± 0,02	± 0,01	5000	5000	4,4 without Keyway	30	20
	12 × 10		0,97	0,09 × nc	0,11 × nc	10	± 0,02	± 0,01	3800	2540	4,5 without Keyway		

1 *Max. travel speed depends of the length of the linear unit, see diagram for particular size of the linear unit. For travel speed and acceleration over the stated value in the table above or diagrams please contact us.*

2 *The stated values are for strokes (and distances between the carriages A) up to 500mm. No Load Torque value increases with stroke (and with A) elongation. nc - Number of carriages*

3 *For the ball nut with the preload of 2% please contact us*

4 *For minimum stroke below the stated value in the table above please contact us.*

TECHNICAL DATA

Mass and mass moment of inertia

Linear unit	Mass of linear unit [kg]	Planar moment of inertia Iy [cm^4]	Iz [cm^4]
CTV 90 S	1,6 + 0,006 × (Abs. stroke + (nc - 1) × A) + 0,30 × (nc - 1)	13,6	102,6
CTV 90 L	2,2 + 0,006 × (Abs. stroke + (nc - 1) × A) + 0,50 × (nc - 1)		

Linear unit	Ball screw [d × l]	Mass moment of inertia [10^{-5} kg m^2]
CTV 90 S	12 × 5	0,32 + 0,002 × (Abs. stroke + (nc - 1) × A) + 0,02 × (nc - 1)
	12 × 10	0,38 + 0,002 × (Abs. stroke + (nc - 1) × A) + 0,08 × (nc - 1)
CTV 90 L	12 × 5	0,43 + 0,002 × (Abs. stroke + (nc - 1) × A) + 0,03 × (nc - 1)
	12 × 10	0,53 + 0,002 × (Abs. stroke + (nc - 1) × A) + 0,13 × (nc - 1)

*Absolute stroke [mm]
A - Distance between carriages [mm]. More info on following pages.
nc - Number of carriages

Mass calculation doesn´t include mass of motor, reduction gear, switches and clamps.

Deflection of the linear unit

Fixed - fixed mounting

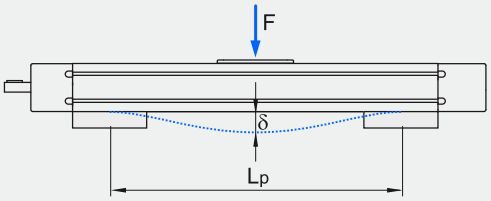

Fixed - free mounting

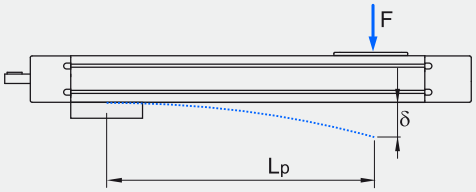

δ Maximum deflection of the linear unit [mm]
δmax Maximum permissible deflection of the linear unit [mm]
F Applied force [N]
Lp Unsupported profile length [mm]

The maximum permissible deflection δmax must not be exceeded. In the case that maximum deflection δ exceeds the maximum permissible deflection δmax additional profile supports are needed.

CTV 90

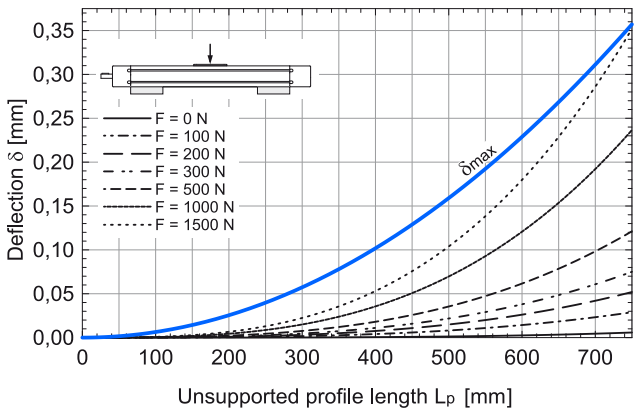

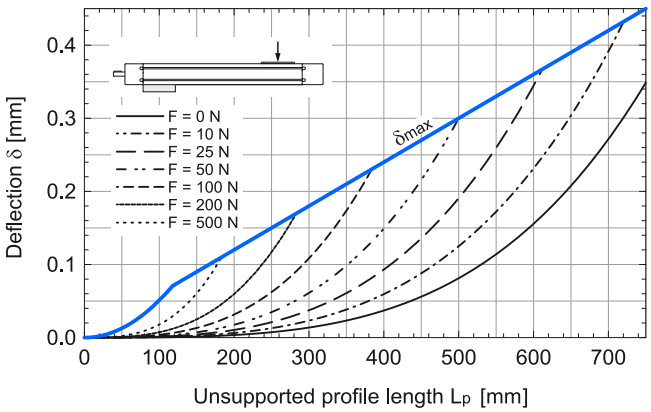

In order to improve the products in this catalogue the specifications are subject to change without notice.

DIMENSIONS

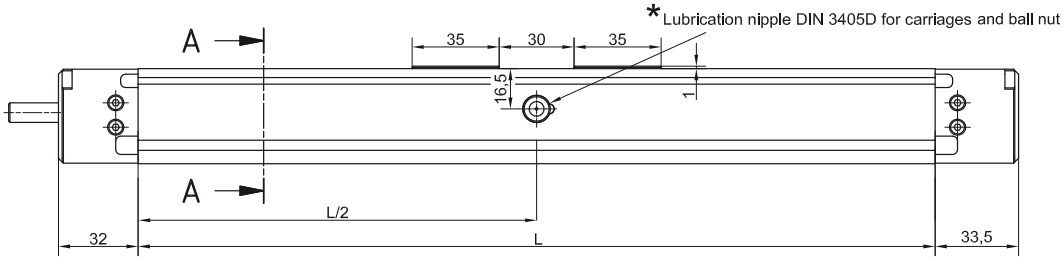

Linear Unit doesn't include any safety stroke.

Absolute stroke = Effective stroke + 2 x Safety stroke

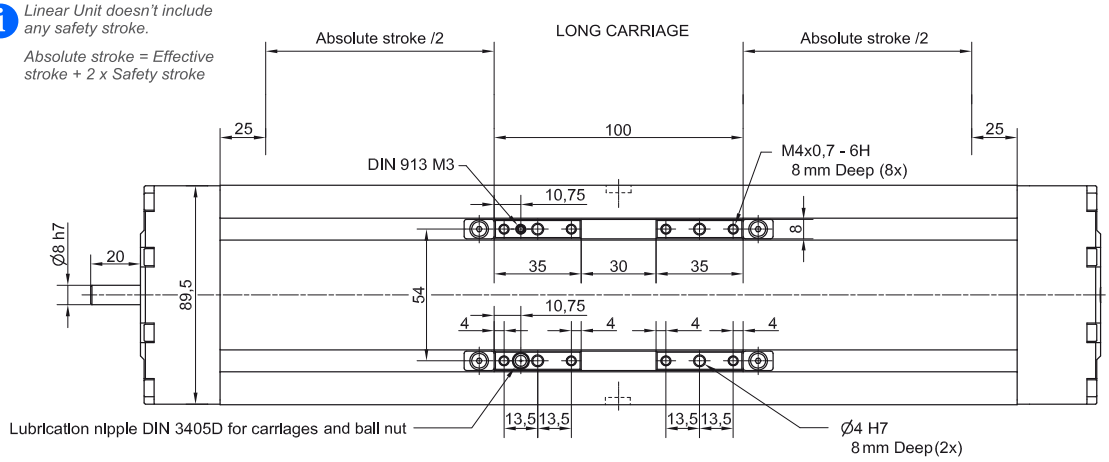

* **Lubrication port position**:
Long carriage: L/2
Short carriage: L/2 - 24,2 mm

For lubrication port positions in the case of multiple carriages please contact us.

All dimensions in mm.
Drawings scales are not equal.

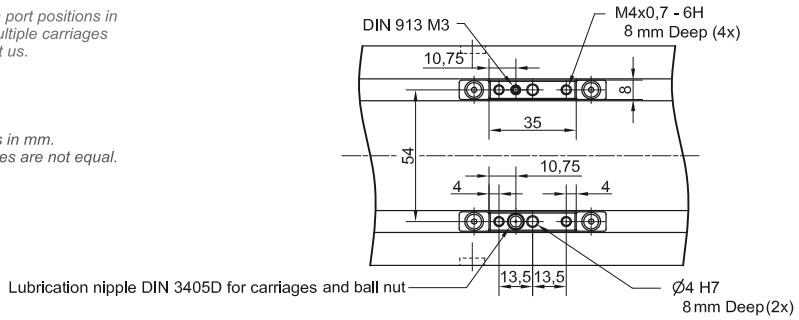

Defining of the linear unit length

L = Effective stroke + 2 × Safety stroke + Lv + A × (nc - 1) + 50 mm

Ltotal = L + 65,5 mm

nc - Number of carriages

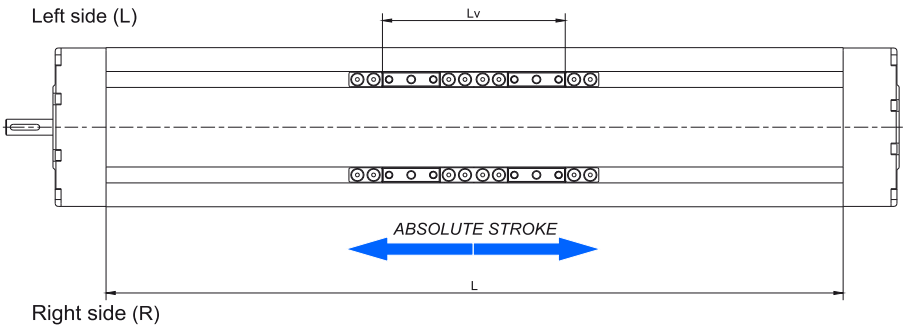

Lv - Long carriage = 100 mm
Lv - Short carriage = 35 mm

Multiple carriages

Amin ≤ A ≤ Alim

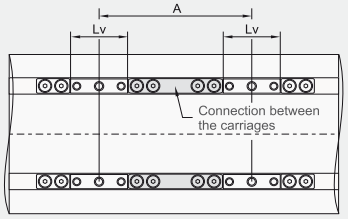

Carriages are connected with non-rigid galvanized steel plates.

	CTV 90 S	CTV 90 L
Amin [mm]	65	130
Alim [mm]	600	665

DIMENSIONS

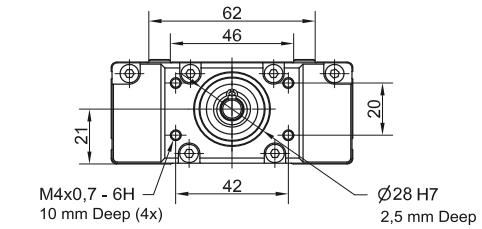

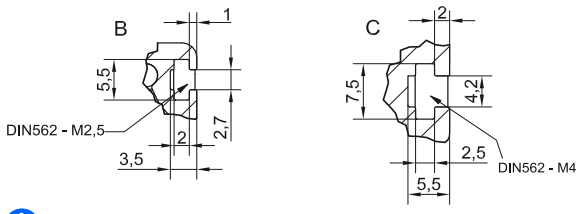

OPTIONAL: **TAP / PIN** holes available on request.

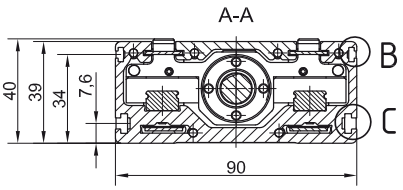

All dimensions in mm; Drawings scales are not equal.

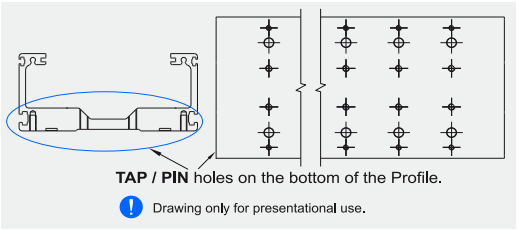

CONNECTION PLATE

CTV 90 L

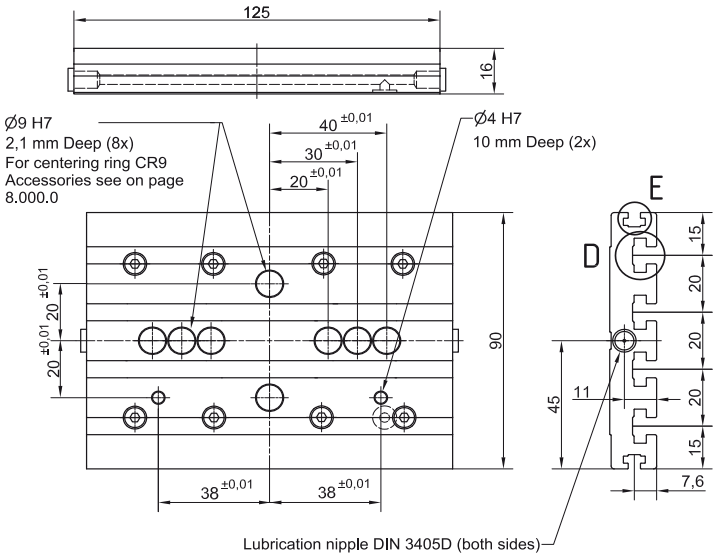

CTV 90 S

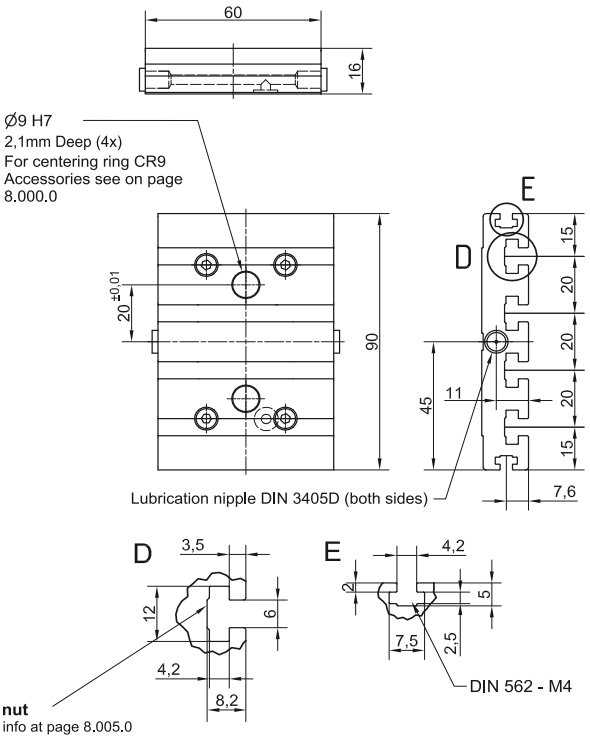

Linear Unit	Plate length [mm]	Weight [kg]	Code
CTV 90 S	60	0,21	103669
CTV 90 L	125	0,44	103668

Mounting elements for mounting the connection plate on the Linear unit are inlcuded.

Mounting the drive

- by the **MOTOR SIDE DRIVE - MSD** *(Page 7.095.0)*
- by the **MOTOR ADAPTER WITH COUPLING** *(Page 8.020.0)*

Available on request.

Maximum travel speed as a function of the profile length (Vmax - L curves)

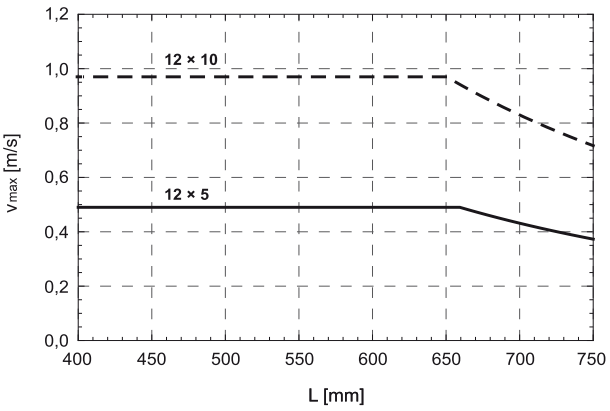

In order to improve the products in this catalogue the specifications are subject to change without notice.

TECHNICAL DATA

General technical data

Linear Unit	Carriage length Lv [mm]	Dynamic load capacity C [N]	Dynamic moment Mx [Nm]	My [Nm]	Mz [Nm]	Max. permissible loads Forces Fpy [N]	Fpz [N]	Moments Mpx [Nm]	Mpy [Nm]	Mpz [Nm]	Moved mass [kg]	* Max. length Lmax [mm]	* Max. stroke [mm]
CTV 110 S	39	19800	650	118	235	4670	9390	310	90	90	0,63	1500	1410
CTV 110 L	124	39600	1305	1680	1680	13080	18800	620	800	550	1,36		1325

*For lengths / stroke over the stated value in the table above please contact us.
Values for max. stroke are not valid for multiple carriages
(equation of defining the linear unit length for particular size of the linear unit needs to be used).

Recommended values of loads:

All the data of dynamic moments and load capacities stated in the upper table are theoretical without considering any safety factor. The safety factor depends on the application and its requested safety. We recommend a minimum safety factor (fs =5.0)

Modulus of elasticity

E = 70000 N / mm^2

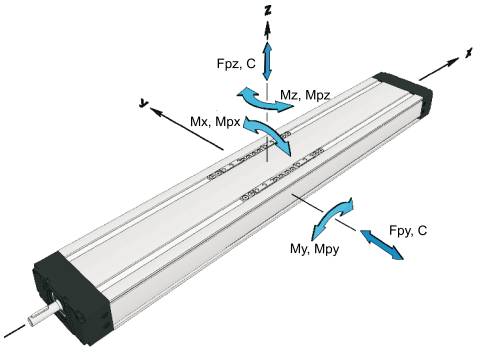

Operating conditions	
Operating temp.	0°C ~ +60°C
Duty cycle	100%

For operating temperature out of the presented range, please contact us.

General technical data for double carriage

Linear Unit	Carriage version	Dynamic load capacity C [N]	* Dynamic moment Mx [Nm]	My [Nm]	Mz [Nm]	* Max. permissible loads Forces Fpy [N]	Fpz [N]	Moments Mpx [Nm]	Mpy [Nm]	Mpz [Nm]
CTV 110	S2	39600	1300	19,8 × A	19,8 × A	12940	18790	620	9,4 × A	6,5 × A
	L2	79200	2600	39,6 × A	39,6 × A	26100	37600	1240	18,8 × A	13,0 × A

*A - Distance between carriages [mm]. More info on following pages.

Presented values are for informational purposes only. Exact values can be calculated using our sizing selection tool on Unimotion web site.

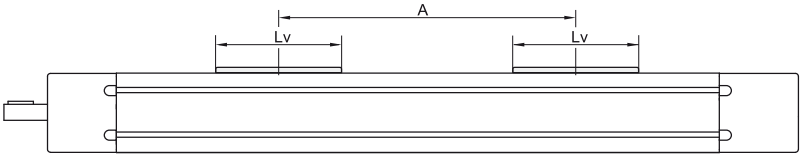

Ball Screw Drive data

Linear Unit	Ball screw [d × l]	Max. rotational speed [rev / min]	1 Max. travel speed [m / s]	2 No load torque Carriage: S [Nm]	Carriage: L [Nm]	Lead constant [mm / rev]	3 Max. repeteability precision [mm] STANDARD ISO7	ISO5	Dynamic load capacity BS Ca [N]	Max. Axial load Fx [N]	Max. drive torque Ma [Nm]	4 Min. stroke [mm]	1 Max. accele-ration [m/s^2]
CTV 110	16 × 5	4200	0,35	0,17 × nc	0,20 × nc	5	± 0,02	± 0,01	13150	8700	5,5 with Keyway 7,7 without Keyway	40	20
	16 × 10		0,70	0,18 × nc	0,21 × nc	10	± 0,02	± 0,01	11550	6730	5,5 with Keyway		
	16 × 16		1,12	0,23 × nc	0,26 × nc	16	± 0,02	± 0,01	8170	4200	11,9 without Keyway		

1 *Max. travel speed depends of the length of the linear unit, see diagram for particular size of the linear unit. For travel speed and acceleration over the stated value in the table above or diagrams please contact us.*

2 *The stated values are for strokes (and distances between the carriages A) up to 500mm. No Load Torque value increases with stroke (and with A) elongation. nc - Number of carriages*

3 *For the ball nut with the preload of 2% please contact us*

4 *For minimum stroke below the stated value in the table above please contact us.*

TECHNICAL DATA

Mass and mass moment of inertia

Linear unit	Mass of linear unit [kg]	Planar moment of inertia Iy [cm^4]	Iz [cm^4]
CTV 110 S	3,3 + 0,008 × (Abs. stroke + (nc - 1) × A) + 0,63 × (nc - 1)	29,1	196,0
CTV 110 L	4,6 + 0,008 × (Abs. stroke + (nc - 1) × A) + 1,36 × (nc - 1)		

Linear unit	Ball screw [d × l]	Mass moment of inertia [10^{-5} kg m^2]
CTV 110 S	16 × 5	0,70 + 0,005 × (Abs. stroke + (nc - 1) × A) + 0,04 × (nc - 1)
	16 × 10	0,82 + 0,005 × (Abs. stroke + (nc - 1) × A) + 0,16 × (nc - 1)
	16 × 16	1,07 + 0,005 × (Abs. stroke + (nc - 1) × A) + 0,41 × (nc - 1)
CTV 110 L	16 × 5	1,19 + 0,005 × (Abs. stroke + (nc - 1) × A) + 0,09 × (nc - 1)
	16 × 10	1,45 + 0,005 × (Abs. stroke + (nc - 1) × A) + 0,34 × (nc - 1)
	16 × 16	1,99 + 0,005 × (Abs. stroke + (nc - 1) × A) + 0,88 × (nc - 1)

*Absolute stroke [mm]
A - Distance between carriages [mm]. More info on following pages.
nc - Number of carriages

Mass calculation doesn´t include mass of motor, reduction gear, switches and clamps.

Deflection of the linear unit

Fixed - fixed mounting

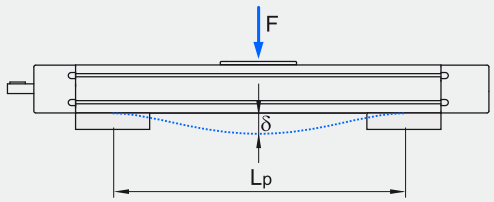

Fixed - free mounting

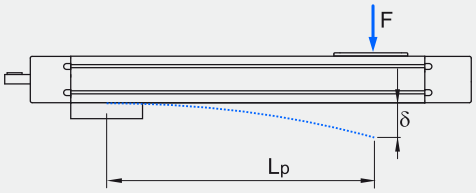

δ Maximum deflection of the linear unit [mm]
δmax Maximum permissible deflection of the linear unit [mm]
F Applied force [N]
Lp Unsupported profile length [mm]

The maximum permissible deflection δmax must not be exceeded. In the case that maximum deflection δ exceeds the maximum permissible deflection δmax additional profile supports are needed.

CTV 110

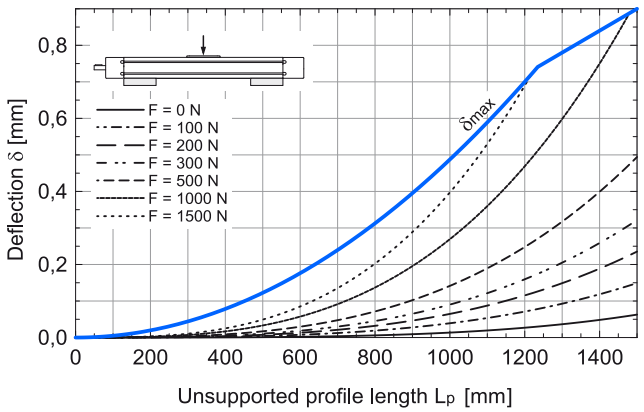

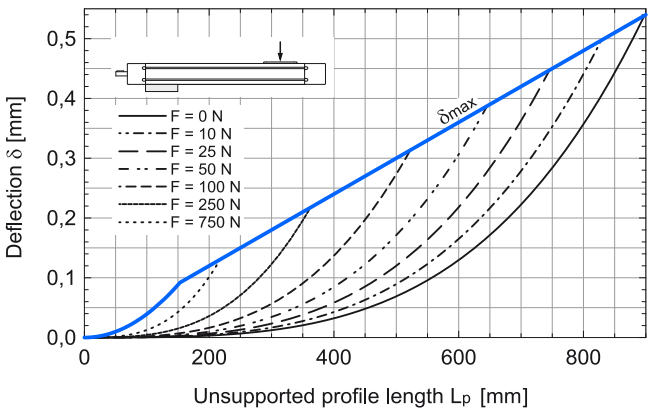

In order to improve the products in this catalogue the specifications are subject to change without notice.

DIMENSIONS

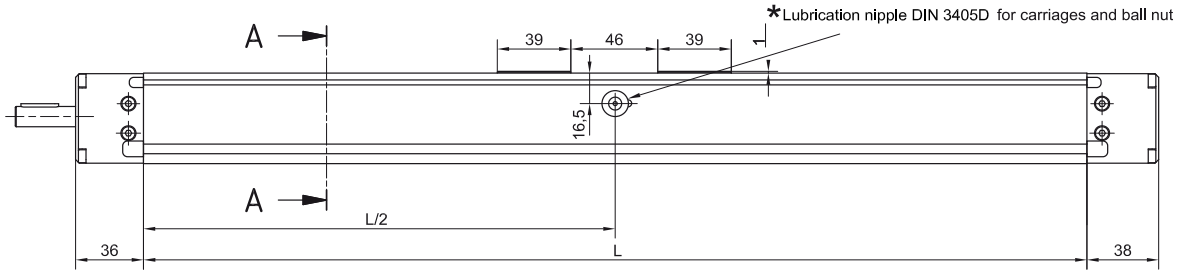

Linear Unit doesn't include any safety stroke.

Absolute stroke = Effective stroke + 2 x Safety stroke

LONG CARRIAGE

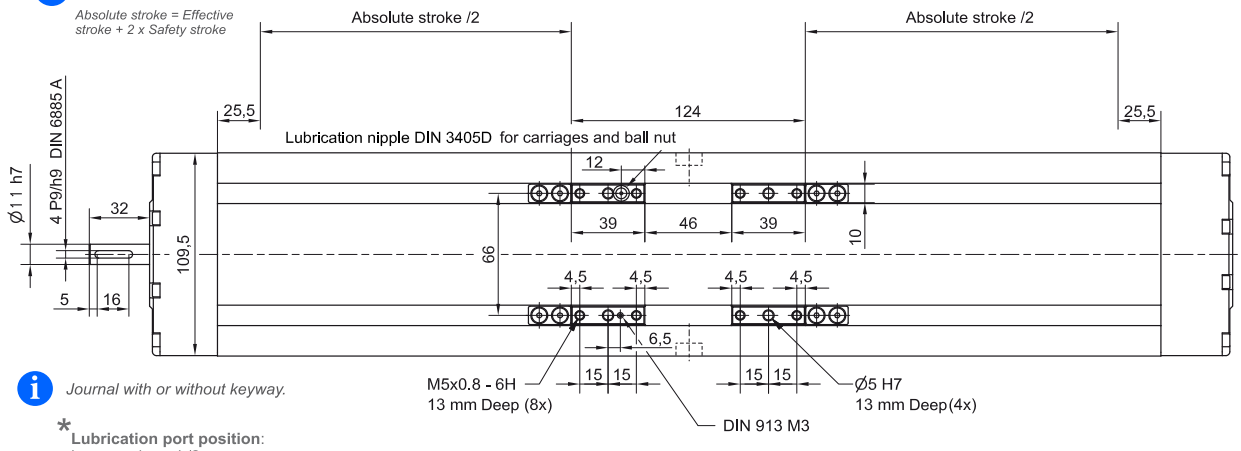

Journal with or without keyway.

***Lubrication port position**:
Long carriage: L/2
Short carriage: L/2 - 39 mm

For lubrication port positions in the case of multiple carriages please contact us.

All dimensions in mm.
Drawings scales are not equal.

SHORT CARRIAGE

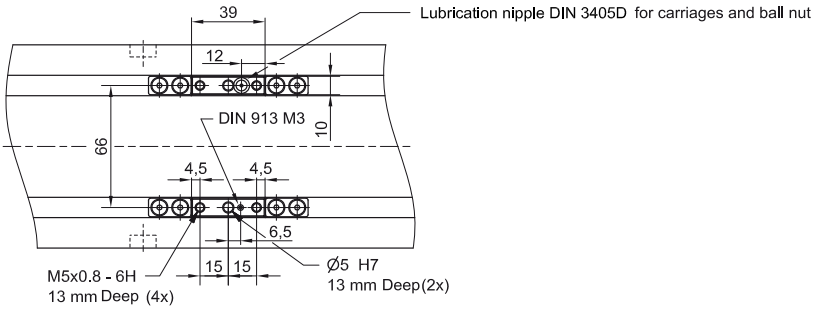

Defining of the linear unit length

L = Effective stroke + 2 × Safety stroke + Lv + A × (nc - 1) + 51 mm

Ltotal = L + 74 mm

nc - Number of carriages

Left side (L)

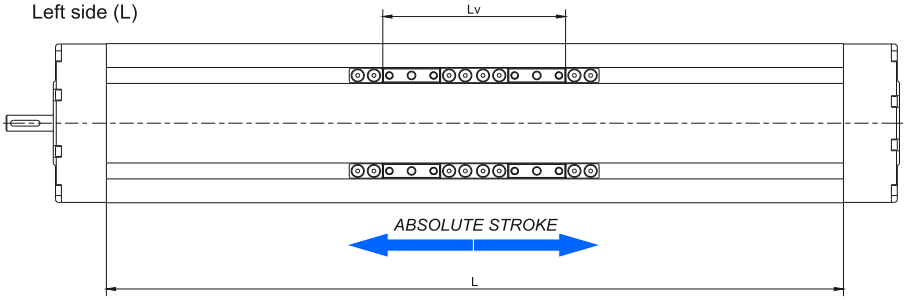

Right side (R)

Lv - Long carriage = 124 mm
Lv - Short carriage = 39 mm

Multiple carriages

Amin ≤ A ≤ Alim

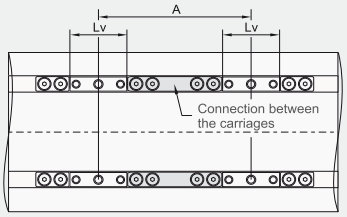

Carriages are connected with non-rigid galvanized steel plates.

	CTV 110 S	CTV 110 L
Amin [mm]	85	175
Alim [mm]	800	885

DIMENSIONS

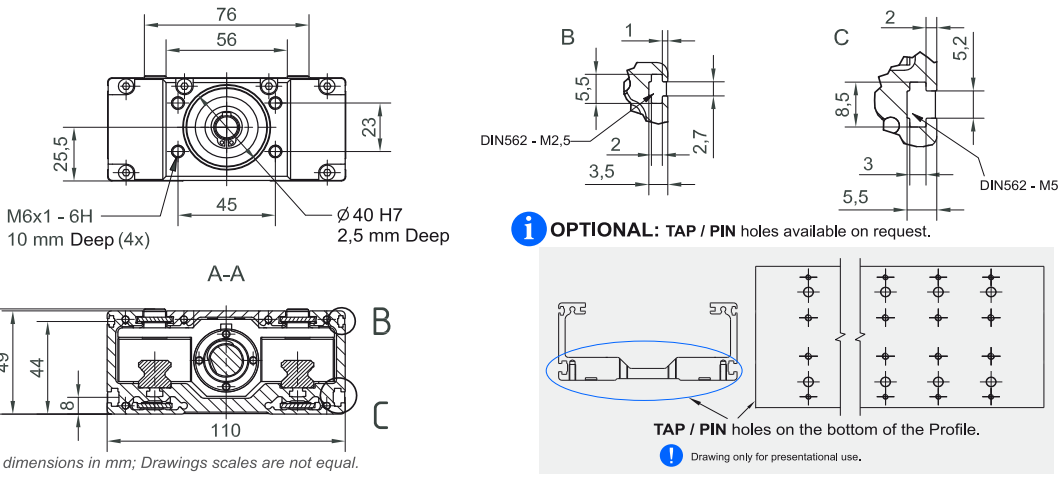

CONNECTION PLATE

CTV 110 L

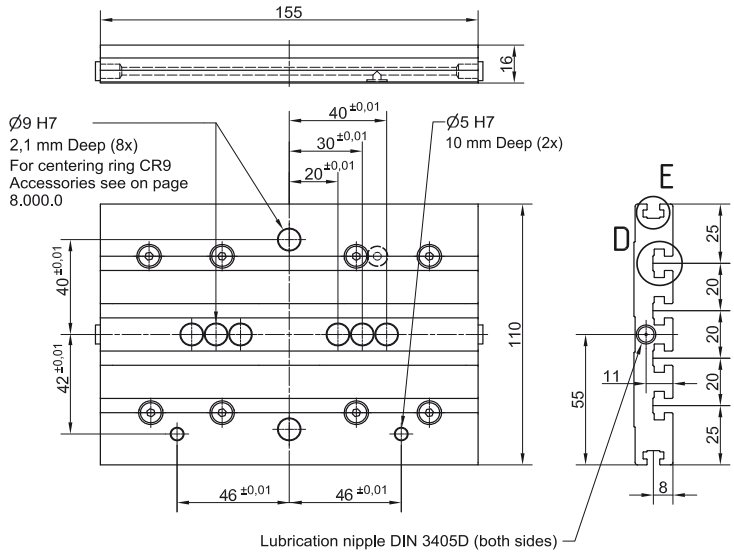

CTV 110 S

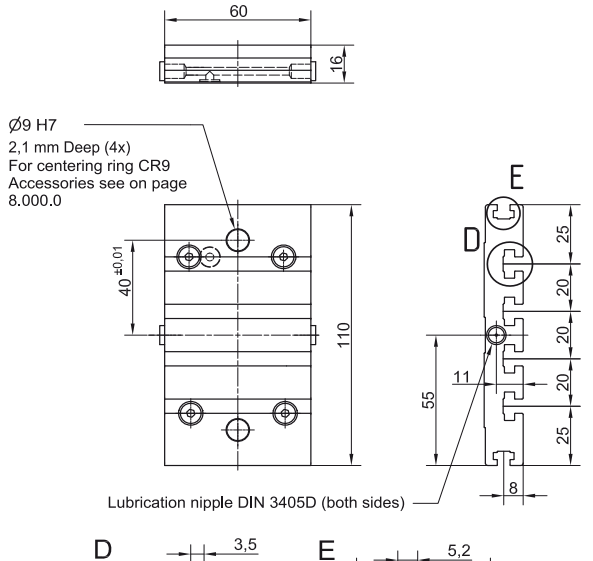

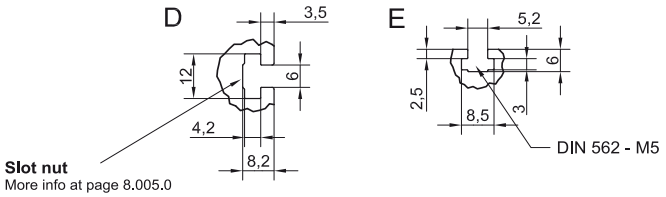

Linear Unit	Plate length [mm]	Weight [kg]	Code
CTV 110 S	60	0,37	103671
CTV 110 L	155	0,74	103670

Mounting elements for mounting the connection plate on the Linear unit are inlcuded.

Mounting the drive

- by the **MOTOR SIDE DRIVE - MSD** *(Page 7.095.0)*
- by the **MOTOR ADAPTER WITH COUPLING** *(Page 8.020.0)*

Available on request.

Maximum travel speed as a function of the profile length (V_{max} = L curves)

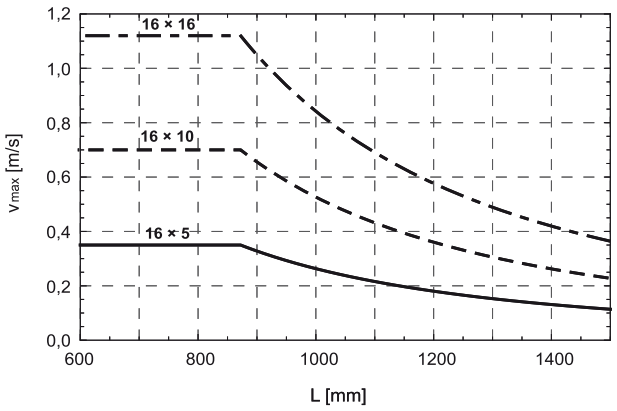

In order to improve the products in this catalogue the specifications are subject to change without notice.

TECHNICAL DATA

General technical data

Linear Unit	Carriage length	Dynamic load capacity	Dynamic moment			Max. permissible loads					Moved mass	* Max. length	* Max. stroke
						Forces		Moments					
	Lv [mm]	C [N]	Mx [Nm]	My [Nm]	Mz [Nm]	Fpy [N]	Fpz [N]	Mpx [Nm]	Mpy [Nm]	Mpz [Nm]	[kg]	Lmax [mm]	[mm]
CTV 145 S	49	34200	1500	260	520	8930	15320	674	260	180	1,19	1800	1690
CTV 145 L	149	68400	3005	3420	3420	17870	30680	1350	1700	893	2,61		1590

*For lengths / stroke over the stated value in the table above please contact us.
Values for max. stroke are not valid for multiple carriages
(equation of defining the linear unit length for particular size of the linear unit needs to be used).

Recommended values of loads:

All the data of dynamic moments and load capacities stated in the upper table are theoretical without considering any safety factor. The safety factor depends on the application and its requested safety. We recommend a minimum safety factor (fs =5.0)

Modulus of elasticity

E = 70000 N / mm^2

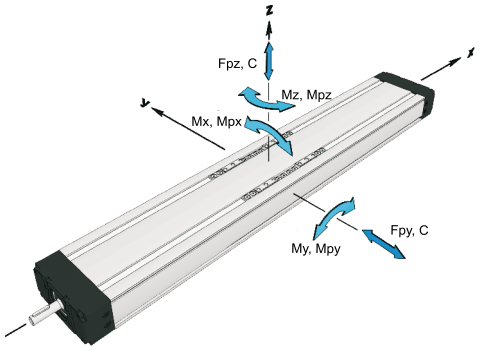

Operating conditions	
Operating temp.	0°C ~ +60°C
Duty cycle	100%

For operating temperature out of the presented range, please contact us.

General technical data for double carriage

Linear Unit	Carriage version	Dynamic load capacity	* Dynamic moment			* Max. permissible loads				
						Forces		Moments		
		C [N]	Mx [Nm]	My [Nm]	Mz [Nm]	Fpy [N]	Fpz [N]	Mpx [Nm]	Mpy [Nm]	Mpz [Nm]
CTV 145	S2	68400	3000	34,2 × A	34,2 × A	17870	30640	1350	15,3 × A	8,9 × A
	L2	136800	6000	68,4 × A	68,4 × A	35700	61300	2700	30,6 × A	17,8 × A

A - Distance between carriages [mm]. More info on following pages.

Presented values are for informational purposes only. Exact values can be calculated using our sizing selection tool on Unimotion web site.

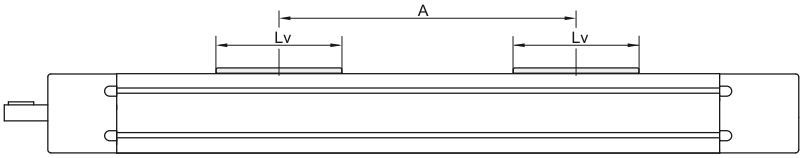

Ball Screw Drive data

Linear Unit	Ball screw	Max. rotational speed	[1] Max. travel speed	[2] No load torque		Lead constant	[3] Max. repeteability precision [mm]		Dynamic load capacity BS	Max. Axial load	Max. drive torque	[4] Min. stroke	[1] Max. acceleration
				Carriage: S	Carriage: L		STANDARD ISO7	ISO5					
	[d × l]	[rev / min]	[m / s]	[Nm]	[Nm]	[mm / rev]			Ca [N]	Fx [N]	Ma [Nm]	[mm]	[m/s^2]
CTV 145	20 × 5	3300	0,28	0,30 × nc	0,35 × nc	5	± 0,02	± 0,01	14800	14800	11,9 with Keyway 13,0 without Keyway	55	20
	20 × 10		0,55	0,32 × nc	0,37 × nc	10	± 0,02	± 0,01	15900	13850	11,9 with Keyway 24,5 without Keyway		
	20 × 20		1,10	0,45 × nc	0,50 × nc	20	± 0,02	± 0,01	16250	6930			
	20 × 50	3000	2,50	0,80 × nc	0,85 × nc	50	± 0,02	± 0,01	13000	2770			

[1] *Max. travel speed depends of the length of the linear unit, see diagram for particular size of the linear unit. For travel speed and acceleration over the stated value in the table above or diagrams please contact us.*

[2] *The stated values are for strokes (and distances between the carriages A) up to 500mm. No Load Torque value increases with stroke (and with A) elongation. nc - Number of carriages*

[3] *For the ball nut with the preload of 2% please contact us*

[4] *For minimum stroke below the stated value in the table above please contact us.*

TECHNICAL DATA

Mass and mass moment of inertia

Linear unit	Mass of linear unit [kg]	Planar moment of inertia Iy [cm^4]	Iz [cm^4]
CTV 145 S	5,7 + 0,015 × (Abs. stroke + (nc - 1) × A) + 1,19 × (nc - 1)	85,3	682,3
CTV 145 L	8,4 + 0,015 × (Abs. stroke + (nc - 1) × A) + 2,61 × (nc - 1)		

Linear unit	Ball screw [d × l]	Mass moment of inertia [10^{-5} kg m^2]
CTV 145 S	20 × 5	3,04 + 0,013 × (Abs. stroke + (nc - 1) × A) + 0,08 × (nc - 1)
	20 × 10	3,27 + 0,013 × (Abs. stroke + (nc - 1) × A) + 0,30 × (nc - 1)
	20 × 20	4,17 + 0,013 × (Abs. stroke + (nc - 1) × A) + 1,21 × (nc - 1)
	20 × 50	10,50 + 0,013 × (Abs. stroke + (nc - 1) × A) + 7,54 × (nc - 1)
CTV 145 L	20 × 5	4,43 + 0,013 × (Abs. stroke + (nc - 1) × A) + 0,17 × (nc - 1)
	20 × 10	4,92 + 0,013 × (Abs. stroke + (nc - 1) × A) + 0,66 × (nc - 1)
	20 × 20	6,91 + 0,013 × (Abs. stroke + (nc - 1) × A) + 2,64 × (nc - 1)
	20 × 50	20,79 + 0,013 × (Abs. stroke + (nc - 1) × A) + 16,53 × (nc - 1)

*Absolute stroke [mm]
A - Distance between carriages [mm]. More info on following pages.
nc - Number of carriages

Mass calculation doesn´t include mass of motor, reduction gear, switches and clamps.

Deflection of the linear unit

Fixed - fixed mounting

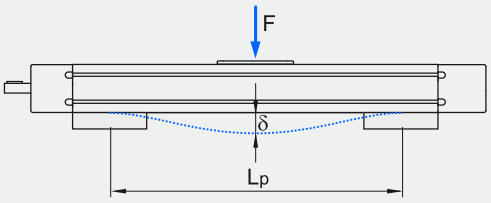

Fixed - free mounting

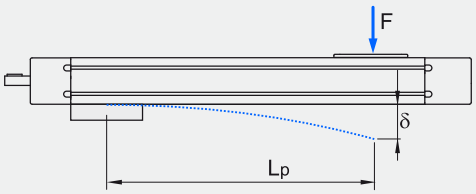

δ Maximum deflection of the linear unit [mm]
δmax Maximum permissible deflection of the linear unit [mm]
F Applied force [N]
Lp Unsupported profile length [mm]

The maximum permissible deflection δmax must not be exceeded. In the case that maximum deflection δ exceeds the maximum permissible deflection δmax additional profile supports are needed.

CTV 145

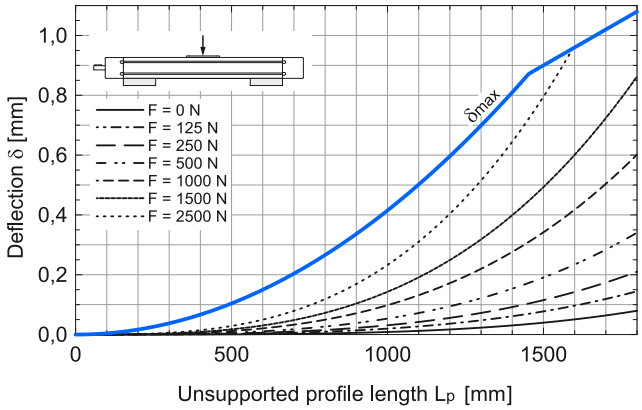

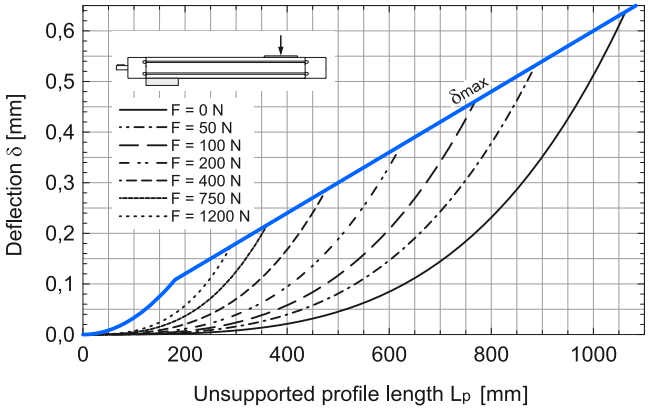

In order to improve the products in this catalogue the specifications are subject to change without notice.

DIMENSIONS

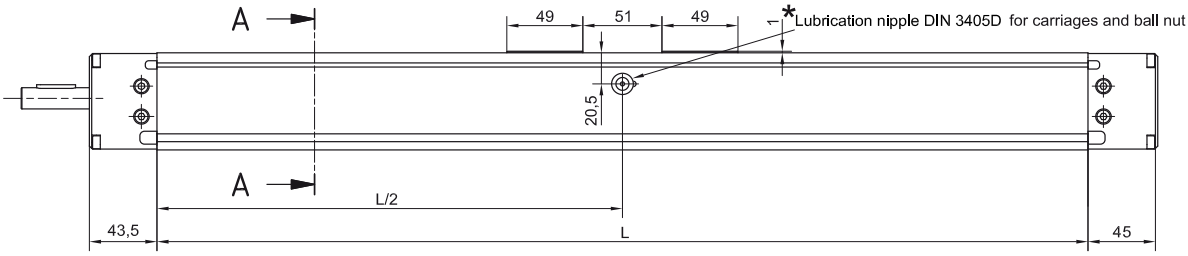

Linear Unit doesn't include any safety stroke.

Absolute stroke = Effective stroke + 2 x Safety stroke

LONG CARRIAGE

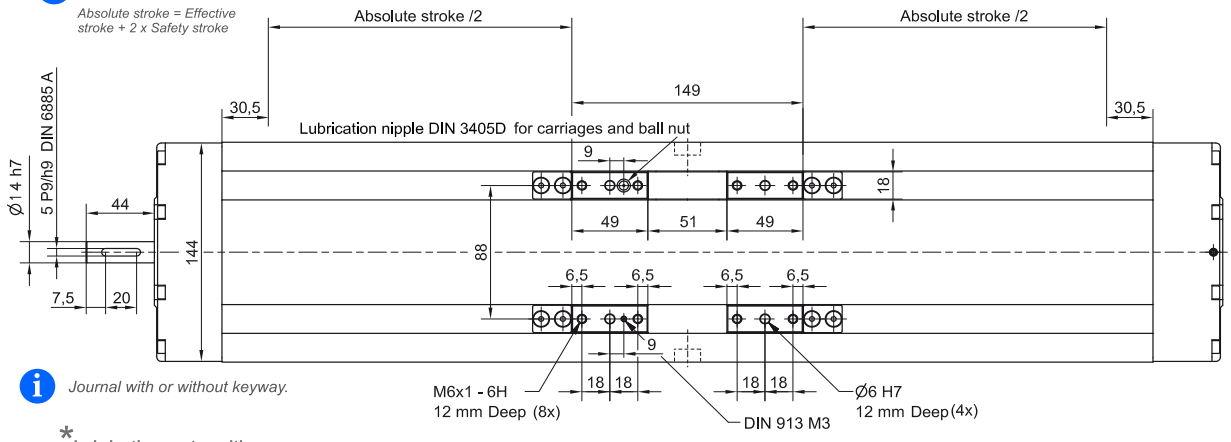

Journal with or without keyway.

* **Lubrication port position**:
Long carriage: L/2
Short carriage: L/2 - 46 mm

For lubrication port positions in the case of multiple carriages please contact us.

All dimensions in mm.
Drawings scales are not equal.

SHORT CARRIAGE

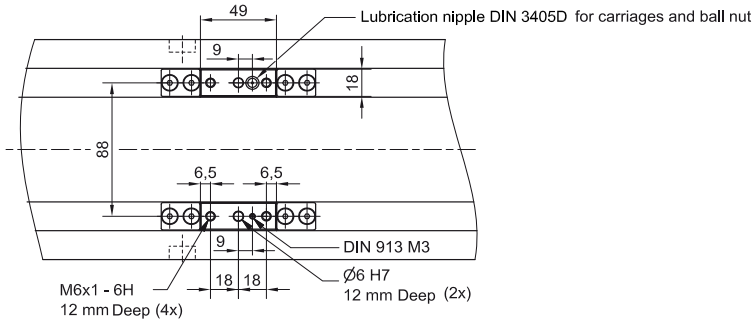

Defining of the linear unit length

L = Effective stroke + 2 × Safety stroke + Lv + A × (nc - 1) + 61 mm

Ltotal = L + 88,5 mm

nc - Number of carriages

Left side (L)

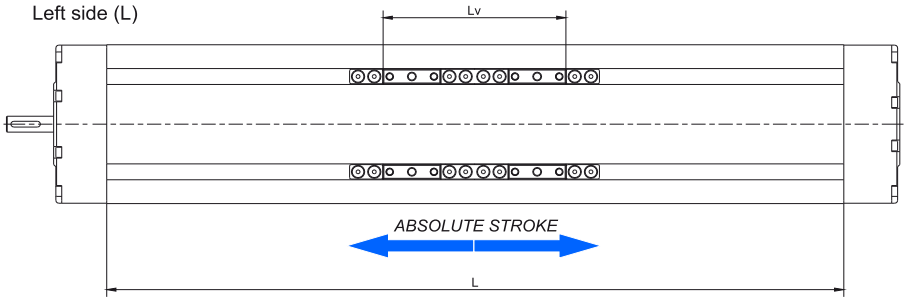

Right side (R)

Lv - Long carriage = 149 mm
Lv - Short carriage = 49 mm

Multiple carriages

Amin ≤ A ≤ Alim

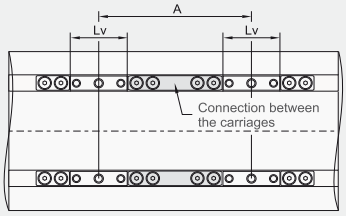

Carriages are connected with non-rigid galvanized steel plates.

	CTV 145 S	CTV 145 L
Amin [mm]	100	200
Alim [mm]	800	900

DIMENSIONS

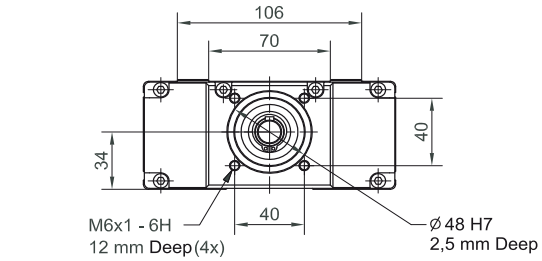

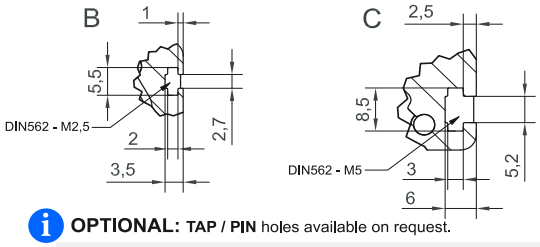

OPTIONAL: **TAP / PIN** holes available on request.

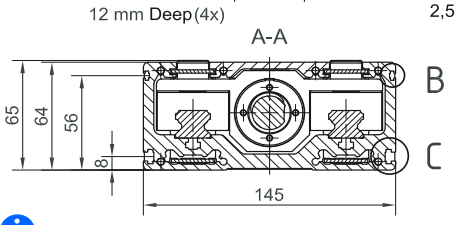

All dimensions in mm; Drawings scales are not equal.

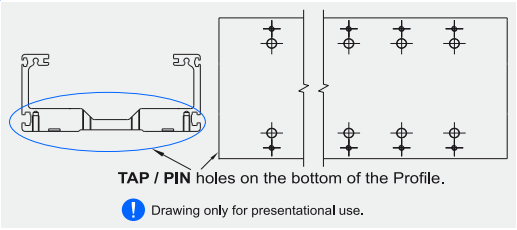

CONNECTION PLATE

CTV 145 L

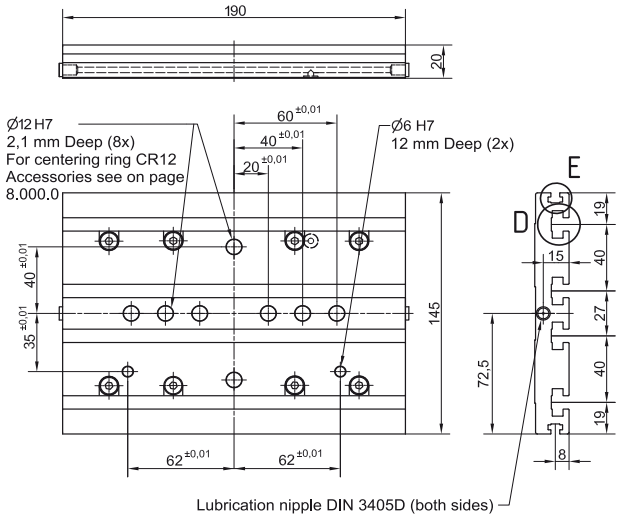

CTV 145 S

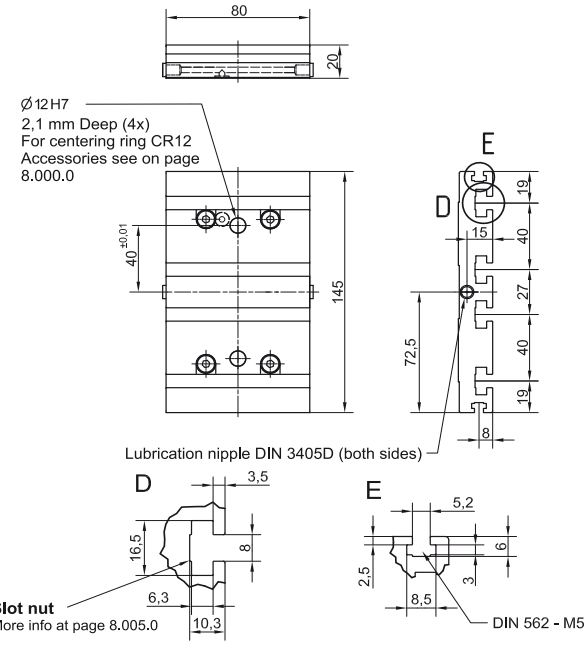

Linear Unit	Plate length [mm]	Weight [kg]	Code
CTV 145 S	80	0,78	103673
CTV 145 L	190	1,54	103672

Mounting elements for mounting the connection plate on the Linear unit are inlcuded.

Mounting the drive

- by the **MOTOR SIDE DRIVE - MSD** *(Page 7.095.0)*
- by the **MOTOR ADAPTER WITH COUPLING** *(Page 8.020.0)*

Available on request.

Maximum travel speed as a function of the profile length (Vmax - L curves)

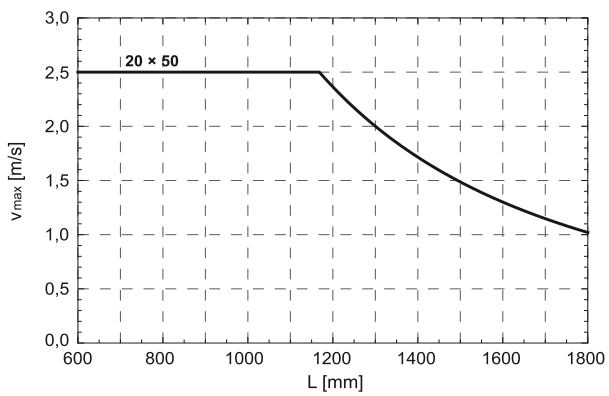

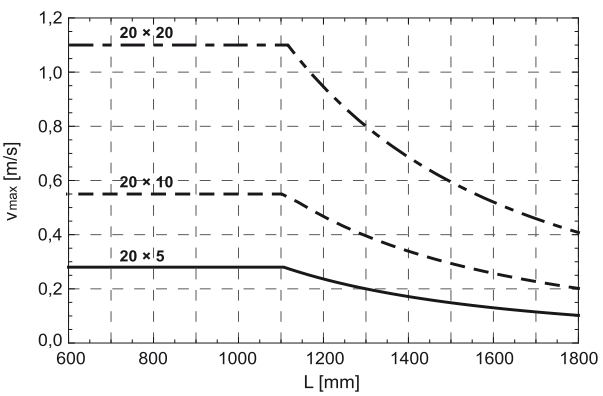

In order to improve the products in this catalogue the specifications are subject to change without notice.

TECHNICAL DATA

General technical data

Linear Unit	Carriage length	Dynamic load capacity	Dynamic moment			Max. permissible loads					Moved mass	* Max. length	* Max. stroke
						Forces		Moments					
	Lv [mm]	C [N]	Mx [Nm]	My [Nm]	Mz [Nm]	Fpy [N]	Fpz [N]	Mpx [Nm]	Mpy [Nm]	Mpz [Nm]	[kg]	Lmax [mm]	[mm]
CTV 200 S	80	49600	3220	450	900	10000	24610	1600	450	308	3,11	2200	2000
CTV 200 L	255	99200	6445	8680	8680	20000	51540	3350	4550	1750	6,21		1825

*For lengths / stroke over the stated value in the table above please contact us.
Values for max. stroke are not valid for multiple carriages
(equation of defining the linear unit length for particular size of the linear unit needs to be used).

Recommended values of loads:

All the data of dynamic moments and load capacities stated in the upper table are theoretical without considering any safety factor. The safety factor depends on the application and its requested safety. We recommend a minimum safety factor (fs =5.0)

Modulus of elasticity

E = 70000 N / mm^2

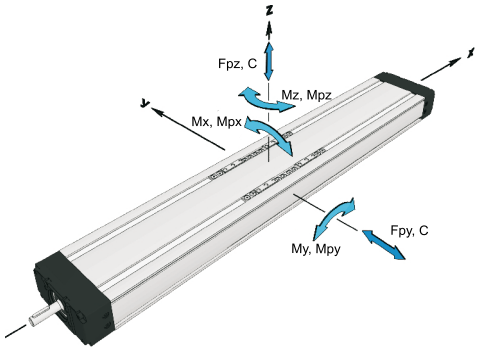

Operating conditions	
Operating temp.	0°C ~ +60°C
Duty cycle	100%

For operating temperature out of the presented range, please contact us.

General technical data for double carriage

Linear Unit	Carriage version	Dynamic load capacity	* Dynamic moment			* Max. permissible loads				
						Forces		Moments		
		C [N]	Mx [Nm]	My [Nm]	Mz [Nm]	Fpy [N]	Fpz [N]	Mpx [Nm]	Mpy [Nm]	Mpz [Nm]
CTV 200	S2	99200	6440	49,6 × A	49,6 × A	20000	49230	3200	24,6 × A	10,0 × A
	L2	198400	12890	99,2 × A	99,2 × A	40000	103000	6700	51,5 × A	20,0 × A

A - Distance between carriages [mm]. More info on following pages.

Presented values are for informational purposes only. Exact values can be calculated using our sizing selection tool on Unimotion web site.

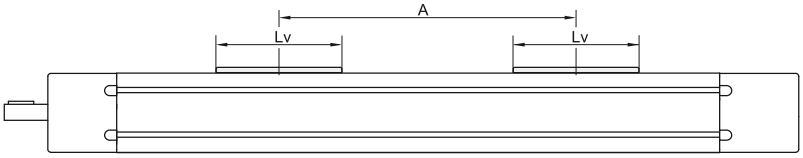

Ball Screw Drive data

Linear Unit	Ball screw	Max. rotational speed	[1] Max. travel speed	[2] No load torque		Lead constant	[3] Max. repeteability precision [mm]		Dynamic load capacity BS	Max. Axial load	Max. drive torque	[4] Min. stroke	[1] Max. acceleration
				Carriage: S	Carriage: L		STANDARD ISO7	ISO5					
	[d × l]	[rev / min]	[m / s]	[Nm]	[Nm]	[mm / rev]			Ca [N]	Fx [N]	Ma [Nm]	[mm]	[m/s^2]
CTV 200	32 × 5	2150	0,18	0,60 × nc	0,70 × nc	5	± 0,02	± 0,01	18850	18850	16,7 with Keyway 16,7 without Keyway	65	20
	32 × 10	3000	0,50	0,70 × nc	0,80 × nc	10	± 0,02	± 0,01	37000	29600	27,3 with Keyway 52,3 without Keyway		
	32 × 20		1,00	0,75 × nc	0,85 × nc	20	± 0,02	± 0,01	22950	14800			
	32 × 32		1,60	0,80 × nc	0,90 × nc	32	± 0,02	± 0,01	15550	9240		70	

[1] *Max. travel speed depends of the length of the linear unit, see diagram for particular size of the linear unit. For travel speed and acceleration over the stated value in the table above or diagrams please contact us.*

[2] *The stated values are for strokes (and distances between the carriages A) up to 500mm. No Load Torque value increases with stroke (and with A) elongation. nc - Number of carriages*

[3] *For the ball nut with the preload of 2% please contact us*

[4] *For minimum stroke below the stated value in the table above please contact us.*

TECHNICAL DATA

Mass and mass moment of inertia

Linear unit	Mass of linear unit [kg]	Planar moment of inertia Iy [cm^4]	Iz [cm^4]
CTV 200 S	15,4 + 0,031 × (Abs. stroke + (nc - 1) × A) + 3,11 × (nc - 1)	417,4	3007,3
CTV 200 L	23,8 + 0,031 × (Abs. stroke + (nc - 1) × A) + 6,21 × (nc - 1)		

Linear unit	Ball screw [d × l]	Mass moment of inertia [10^{-5} kg m^2]
CTV 200 S	32 × 5	21,17 + 0,069 × (Abs. stroke + (nc - 1) × A) + 0,20 × (nc - 1)
	32 × 10	21,76 + 0,069 × (Abs. stroke + (nc - 1) × A) + 0,79 × (nc - 1)
	32 × 20	24,12 + 0,069 × (Abs. stroke + (nc - 1) × A) + 3,15 × (nc - 1)
	32 × 32	29,04 + 0,069 × (Abs. stroke + (nc - 1) × A) + 8,07 × (nc - 1)
CTV 200 L	32 × 5	33,41 + 0,069 × (Abs. stroke + (nc - 1) × A) + 0,39 × (nc - 1)
	32 × 10	34,59 + 0,069 × (Abs. stroke + (nc - 1) × A) + 1,57 × (nc - 1)
	32 × 20	39,31 + 0,069 × (Abs. stroke + (nc - 1) × A) + 6,29 × (nc - 1)
	32 × 32	49,12 + 0,069 × (Abs. stroke + (nc - 1) × A) + 16,11 × (nc - 1)

*Absolute stroke [mm]
A - Distance between carriages [mm]. More info on following pages.
nc - Number of carriages

Mass calculation doesn´t include mass of motor, reduction gear, switches and clamps.

Deflection of the linear unit

Fixed - fixed mounting

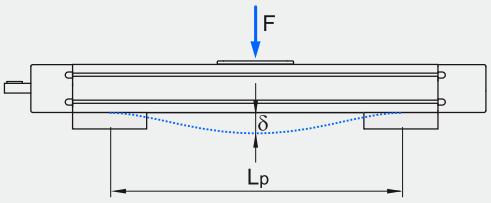

Fixed - free mounting

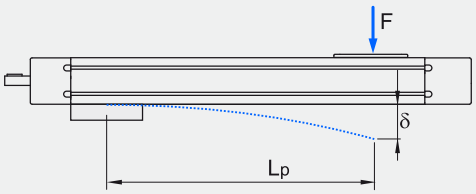

δ Maximum deflection of the linear unit [mm]
δmax Maximum permissible deflection of the linear unit [mm]
F Applied force [N]
Lp Unsupported profile length [mm]

The maximum permissible deflection δmax must not be exceeded. In the case that maximum deflection δ exceeds the maximum permissible deflection δmax additional profile supports are needed.

CTV 200

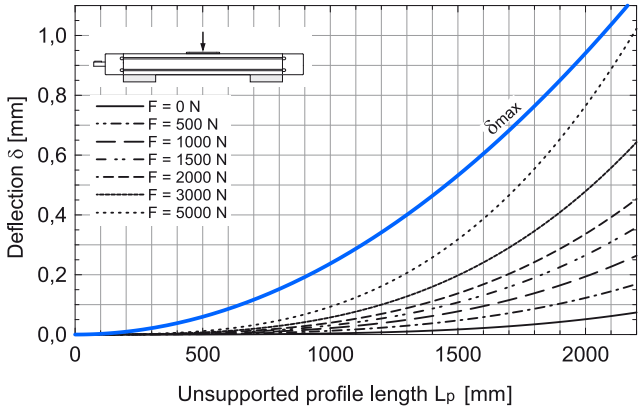

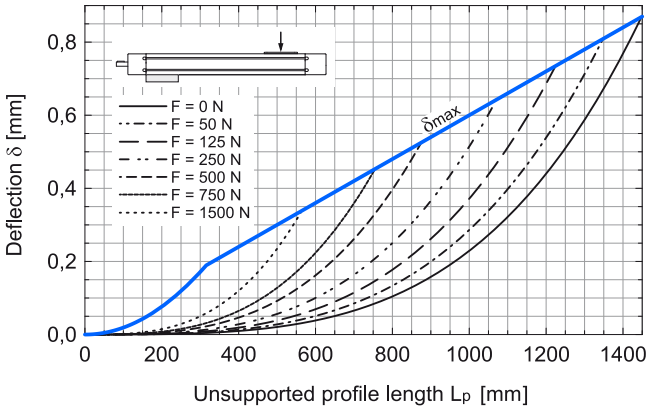

In order to improve the products in this catalogue the specifications are subject to change without notice.

DIMENSIONS

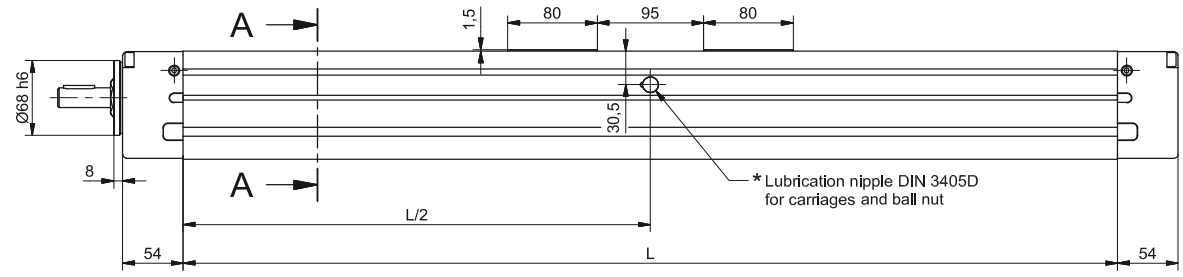

Linear Unit doesn't include any safety stroke.
Absolute stroke = Effective stroke + 2 x Safety stroke

LONG CARRIAGE

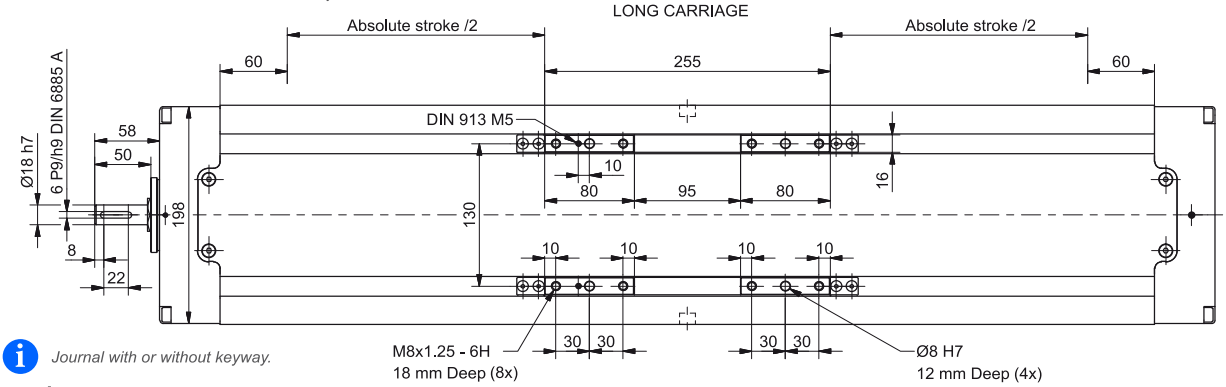

Journal with or without keyway.

* **Lubrication port position**:
Long carriage: L/2
Short carriage: L/2 - 53 mm

For lubrication port positions in the case of multiple carriages please contact us.

All dimensions in mm.
Drawings scales are not equal.

SHORT CARRIAGE

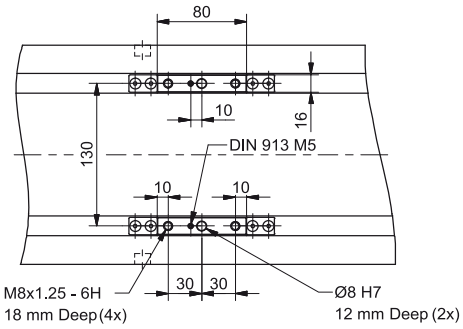

Defining of the linear unit length

L = Effective stroke + 2 × Safety stroke + Lv + A × (nc - 1) + 120 mm

Ltotal = L + 108 mm

nc - Number of carriages

Left side (L)

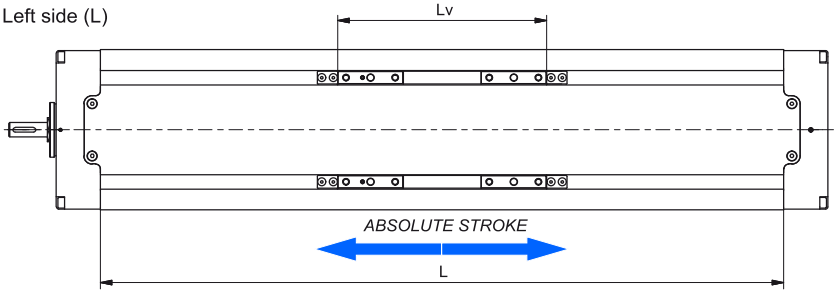

Right side (R)

Lv - Long carriage = 255 mm
Lv - Short carriage = 80 mm

Multiple carriages

Amin ≤ A ≤ Alim

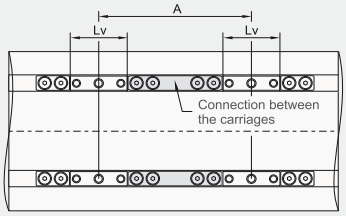

Carriages are connected with non-rigid galvanized steel plates.

	CTV 200 S	CTV 200 L
Amin [mm]	130	305
	* 195	* 310
Alim [mm]	900	1075

DIMENSIONS

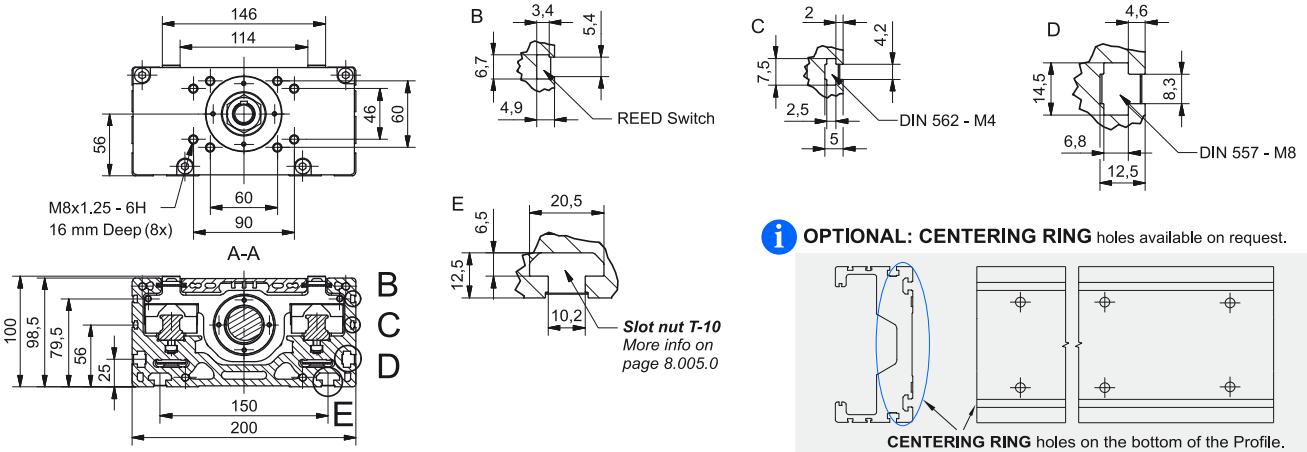

All dimensions in mm; Drawings scales are not equal.

OPTIONAL: CENTERING RING holes available on request.

CENTERING RING holes on the bottom of the Profile.

Drawing only for presentational use.

CONNECTION PLATE

CTV 200 L

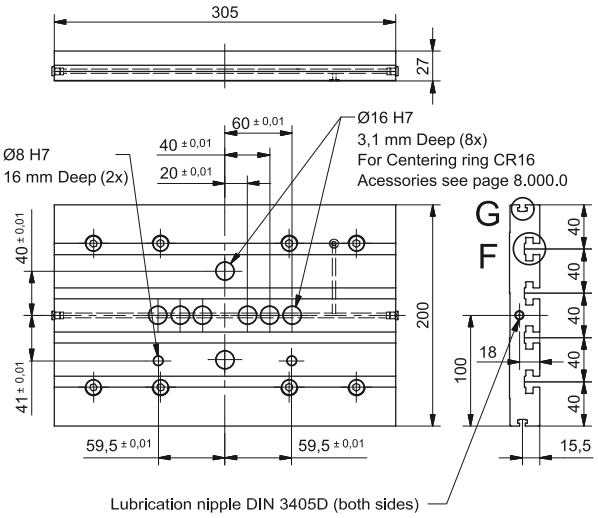

CTV 200 S

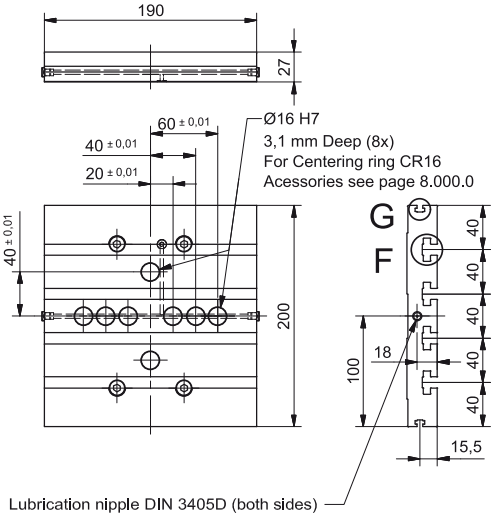

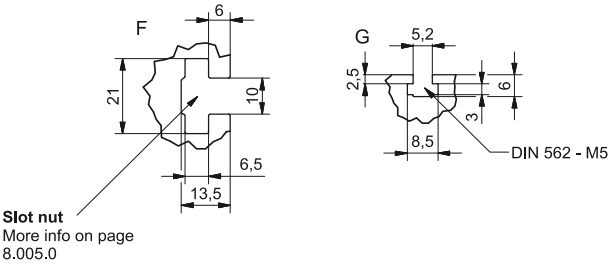

Linear Unit	Plate length [mm]	Weight [kg]	Code
CTV 200 S	190	2,32	103675
CTV 200 L	305	3,75	103674

Mounting elements for mounting the connection plate on the Linear unit are inlcuded.

Please consider our advice in our Maintenance- and assembly instructions

Mounting the drive

- by the **MOTOR SIDE DRIVE - MSD** *(Page 7.095.0)*
- by the **MOTOR ADAPTER WITH COUPLING** *(Page 8.020.0)*

Available on request.

Maximum travel speed as a function of the profile length (Vmax - L curves)

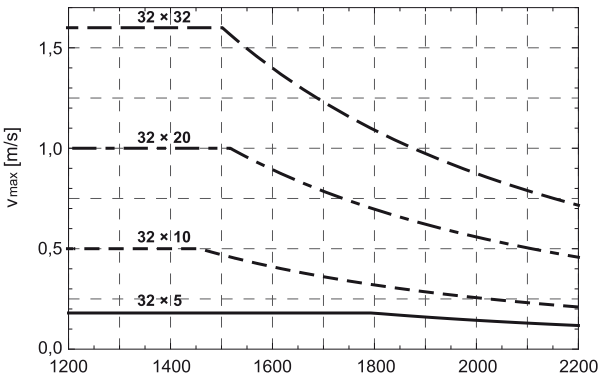

In order to improve the products in this catalogue the specifications are subject to change without notice.

STRUCTURAL DESIGN

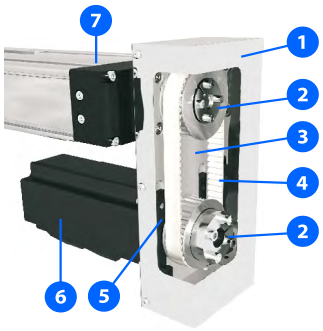

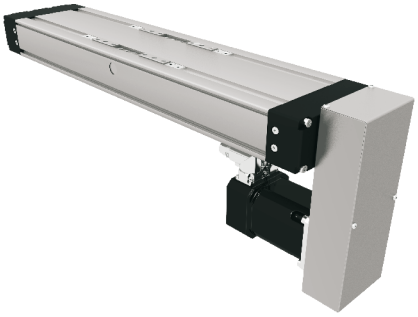

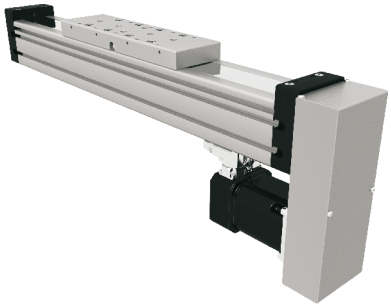

1 - Cover
2 - Attachment of pulley with clamping set
3 - Anodized aluminium housing
4- Toothed belt
5- Belt tensioning system (elongation and frequency of belt span provided with delivery of unit)
6 - Motor
7 - Linear unit - CTV / MTV

The linear unit must be executed with drive journal without keyway, so that the MSD belt drive can be mounted on it.

Possible installation positions of MSD

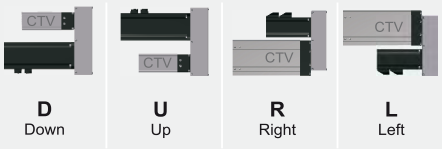

D Down | U Up | R Right | L Left

HOW TO ORDER

MSD - **CTV 110** - **T2** - **1,5** - **MSM040B**

Motor Side Drive: MSD

Linear Unit series : CTV 110

CTV / MTV

Type : T2

Gear ratio : 1,5

Motor type :
According to customer's drawing

TECHNICAL DATA AND DIMENSIONS

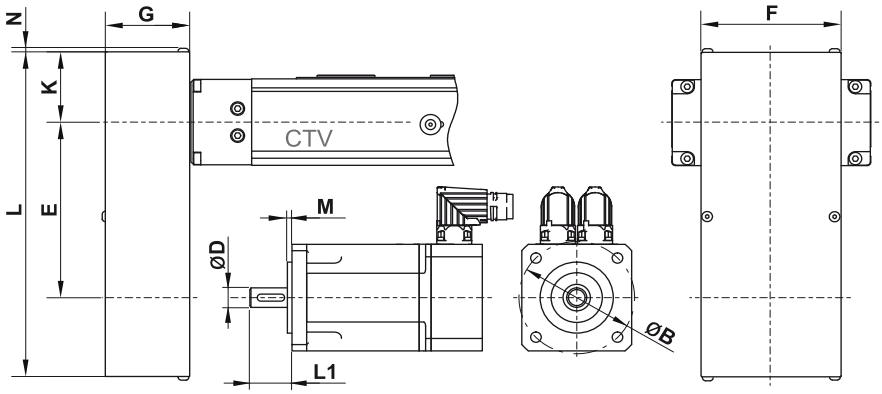

Clamping set

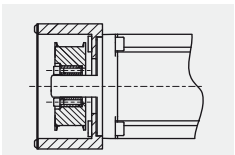

Keyway

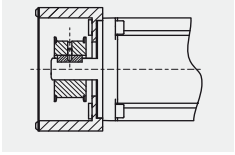

MTV 40

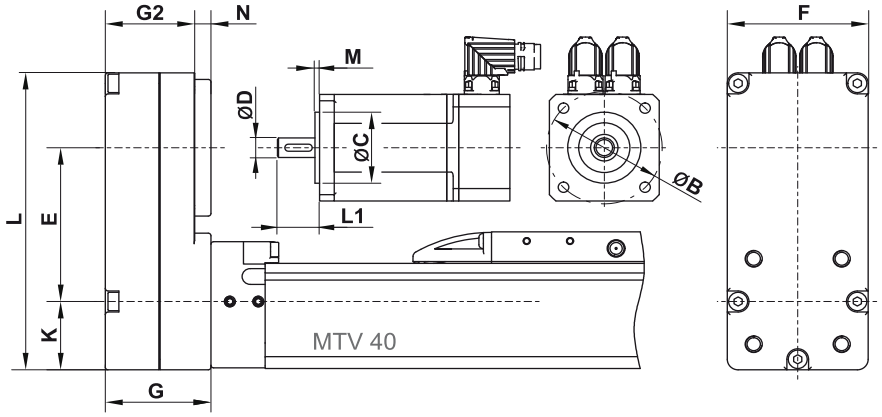

TECHNICAL DATA AND DIMENSIONS

Technical data

Linear Unit	Type	Gear ratio	Max. drive torque (linear unit)	** Max. radial load on shaft	Mass moment of inertia	Mass ***	Motor size limits [mm]								
							ØB	ØC	*M	L1 min		L1 max	ØD Clamping set	ØD Keyway	
		i	[Nm]	[N]	[10^{-6}kg m^2]	[kg]	max	max	max	Clamping set	Keyway		max	min	max
MTV 40	T1	1	1,3	60	4,6	0,5	60	36	4	****	20	32	8	>8	12
		1,5	1,3	60	5,4	0,5							8	-	-
MTV 40	T2	1	3	80	45	0,8	80	52	4		25	39	19	-	-
		1,5	3	80	31	0,7							10	>10	14
CTV 90	T1	1	2,7	90	75	0,8	70	-	4		25	39	19	-	-
		1,5	2,7	90	45	0,7							10	>10	14
CTV 110 MTV 65	T1	1	5	175	70	0,8	70	-	4		25	39	19	-	-
		1,5	5	175	45	0,8							10	>10	14
CTV 110 MTV 65	T2	1	9	245	210	1,5	100	-	4		30	49	22	-	-
		1,5	11	235	330	1,5							19	>19	28
CTV 145 MTV 80	T1	1	13	350	210	1,5	100	-	4		30	49	22	-	-
		1,5	19	410	330	1,6							19	>19	28
CTV 145 MTV 80	T2	1	19	410	550	3,0	130	-	4		35	59	35	-	-
		2	24	375	860	2,9							19	>19	28
CTV 200 MTV 110	T1	1	25	500	640	3,8	130	-	4		35	59	35	-	-
		2	25	400	960	3,6							19	>19	28

(max. drive speed: 3000 1/min; No load torque: approx. 0,5 Nm)

**For a bigger value an additonal adapter plate is used. For the case of MTV 40 a thicker plate may be used.*

***This is the load which is linearly dependent on the max. drive torque and is generated by the correct pretension of the belt. This load needs to be reduced in accordance with the capabilities of the motor.*

****This is an average value. It could differ depending to the motor dimensions.*

*****Minimum dimension L1 depends on the size of particular clamping set. Values can be found in the table on page 7.105.0.*

Dimensions

Linear Unit	Type	Gear ratio	Dimensions [mm]						
		i	E (± 0,5)	L	F	G	G2	K	N
MTV 40	T1	1	58,5	113	52	39	33	26	6 *
		1,5	59						
MTV 40	T2	1	65	135	68	42	36	31	8 *
		1,5	64,5						
CTV 90	T1	1	100	179	70	41	-	31	2
		1,5	102						
CTV 110 MTV 65	T1	1	100	179	70	41	-	31	2
		1,5	112	190					
CTV 110 MTV 65	T2	1	145	250	90	51	-	43	2
		1,5	139						
CTV 145 MTV 80	T1	1	145	250	90	51	-	43	2
		1,5	180	282					
CTV 145 MTV 80	T2	1	160	297	120	61	-	56	2,5
		2	158						
CTV 200 MTV 110	T1	1	268	403	120	61	-	56	2,5
		2	267						

**This is a standard value. It could differ depending to the motor dimensions M and L1.*

In order to improve the products in this catalogue the specifications are subject to change without notice.

TECHNICAL DATA AND DIMENSIONS

Minimum dimension L1 [mm] depends on the motor shafts diameter ØD

Linear Unit	Type	Gear ratio i	ØD [mm]																								
			4	5	6	6,35	7	8	9	9,53	10	11	12	14	15	16	17	18	19	20	22	24	25	25,4	28	30	32	35
MTV 40	T1	1	17	17	17	17	17	17	-	-	-	-	-	-	-	-	-	-	-	-	-	-	-	-	-	-	-	-
		1,5	17	17	17	17	20	20	-	-	-	-	-	-	-	-	-	-	-	-	-	-	-	-	-	-	-	-
MTV 40	T2	1	-	-	17	17	17	17	18	18	18	18	18	22	22	22	25	25	25	-	-	-	-	-	-	-	-	-
		1,5	-	-	17	17	17	17	18	18	18	-	-	-	-	-	-	-	-	-	-	-	-	-	-	-	-	-
CTV 90	T1	1	-	-	23	23	23	23	24	24	24	24	24	28	28	28	31	31	31	-	-	-	-	-	-	-	-	-
		1,5	-	-	23	23	23	23	24	24	24	-	-	-	-	-	-	-	-	-	-	-	-	-	-	-	-	-
CTV 110 MTV 65	T1	1	-	-	23	23	23	23	24	24	24	24	24	28	28	28	31	31	31	-	-	-	-	-	-	-	-	-
		1,5	-	-	23	23	23	23	24	24	24	-	-	-	-	-	-	-	-	-	-	-	-	-	-	-	-	-
CTV 110 MTV 65	T2	1	-	-	-	-	-	23	24	24	24	24	24	28	28	28	31	31	31	31	31	-	-	-	-	-	-	-
		1,5	-	-	-	-	23	23	24	24	24	24	24	28	28	28	31	31	31	-	-	-	-	-	-	-	-	-
CTV 145 MTV 80	T1	1	-	-	-	-	-	-	24	24	24	24	24	28	28	28	31	31	31	31	31	-	-	-	-	-	-	-
		1,5	-	-	-	-	-	-	24	24	24	24	24	28	28	28	31	31	31	-	-	-	-	-	-	-	-	-
CTV 145 MTV 80	T2	1	-	-	-	-	-	-	-	-	-	-	29	33	33	33	36	36	36	36	36	40	40	40	40	40	40	43
		2	-	-	-	-	-	-	29	29	29	29	29	33	33	33	36	36	36	-	-	-	-	-	-	-	-	-
CTV 200 MTV 110	T1	1	-	-	-	-	-	-	-	-	-	-	29	33	33	33	36	36	36	36	36	40	40	40	40	40	40	43
		2	-	-	-	-	-	-	29	29	29	29	29	33	33	33	36	36	36	-	-	-	-	-	-	-	-	-

Accessories

FIXING SYSTEM

MTJ, MRJ, MTV
MTJ ECO

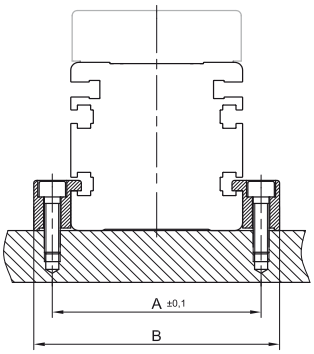

CTV, CTJ

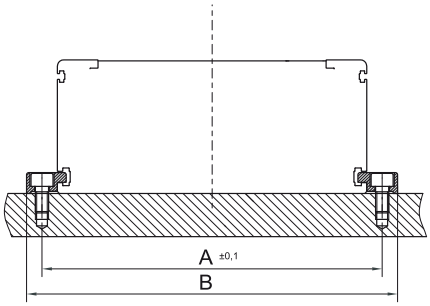

General

The linear units are mounted by using fixtures which are placed in the slot on the side of the profile.

Linear Unit must be mounted by the aluminium profile!

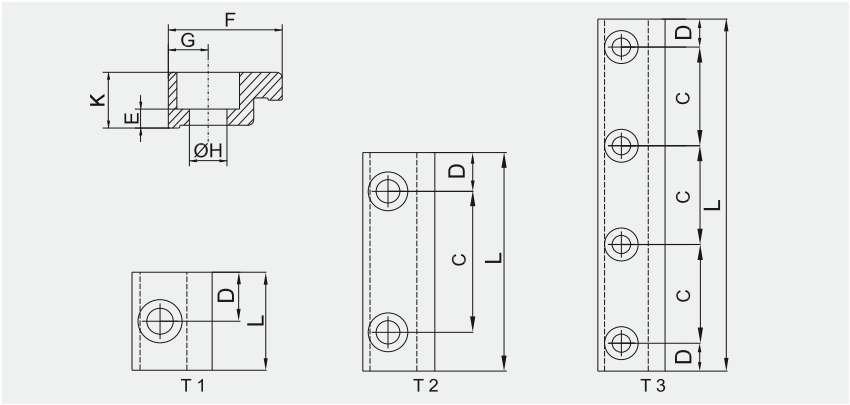



Linear Unit	Type	Dimensions [mm]										Screw	Countersink for	Weight [kg]	Code
		A	B	C	D	L	E	F	G	ØH	K				
MTJ, MRJ, MTV 40	T 2	50	64,4	40	7,5	55	2,5	15	7,2	5,5	8	M5	DIN 912	0,014	37139
MTJ, MRJ, MTV 65	T 2	78	93	40	10	60	11,5	20	7,5	6,5	20	M6	DIN 912	0,054	37129
MTJ, MRJ, MTV 80	T 2	93	108	40	10	60	11,5	20	7,5	6,5	20	M6	DIN 912	0,054	37129
MTJ, MRJ, MTV 110	T 2	130	150	40	10	60	18	30	10	8,5	27	M8	DIN 912	0,082	44375
MTJ ECO 40	T 2	52	66	40	7,5	55	14,5	20	7	5,5	20	M5	DIN 912	0,035	40728
CTV, CTJ 90	T 1	102	112	/	12,5	25	4,5	15	5	4,5	9	M4	DIN 912	0,01	46994
CTV, CTJ 90	T 2	102	112	40	11	62	4,5	15	5	4,5	9	M4	DIN 912	0,02	48636
CTV, CTJ 90	T 3	102	112	20	8,5	77	4,5	15	5	4,5	9	M4	DIN 912	0,025	47163
CTV, CTJ 90	T3	102	112	25	6	87	4,5	15	5	4,5	9	M4	DIN 912	0,028	55261
CTV, CTJ 90	T 3	102	112	30	8,5	107	4,5	15	5	4,5	9	M4	DIN 912	0,031	55638
CTV, CTJ 110	T 1	126	140	/	12,5	25	3,4	20	7	6,6	10	M6	DIN 912	0,01	48642
CTV, CTJ 110	T 2	126	140	40	11	62	3,4	20	7	6,6	10	M6	DIN 912	0,03	48643
CTV, CTJ 110	T 3	126	140	20	8,5	77	4,5	20	7	5,5	10	M5	DIN 912	0,03	48640
CTV, CTJ 110	T 3	126	140	30	8,5	107	4,5	20	7	5,5	10	M5	DIN 912	0,045	46995
CTV, CTJ 110	T3	126	140	40	11	142	3,4	20	7	6,6	10	M6	DIN 912	0,056	55260
CTV, CTJ 145	T 1	161	175	/	12,5	25	3,4	20	7	6,6	10	M6	DIN 912	0,01	48642
CTV, CTJ 145	T 2	161	175	40	11	62	3,4	20	7	6,6	10	M6	DIN 912	0,03	48643
CTV, CTJ 145	T 3	161	175	20	8,5	77	4,5	20	7	5,5	10	M5	DIN 912	0,03	48640
CTV, CTJ 145	T 3	161	175	30	8,5	107	4,5	20	7	5,5	10	M5	DIN 912	0,045	46995
CTV, CTJ 145	T 3	161	175	40	11	142	3,4	20	7	6,6	10	M6	DIN 912	0,056	55260
CTV, CTJ 200	T 2	222	240	40	19	78	14,8	29	9	8,5	27,5	M8	DIN 912	0,110	53049
CTV, CTJ 200	T 2	222	240	50	19	88	14,8	29	9	8,5	27,5	M8	DIN 912	0,120	53050
CTV, CTJ 200	T 2	222	240	70	19	108	16,3	29	9	8,5	27,5	M8	DIN 912	0,160	53051

Recommended number of clamping fixtures: *For T1 is recommended 6 pcs. per meter on each side, for T2 is recommended 3 pcs. per meter on each side and for T3 is recommended 3 pcs. per meter on each side.*

CENTERING RINGS

CR 7

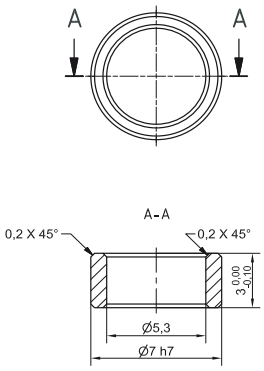

CR 9

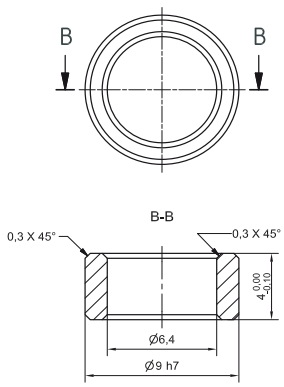

CR 7 / 9

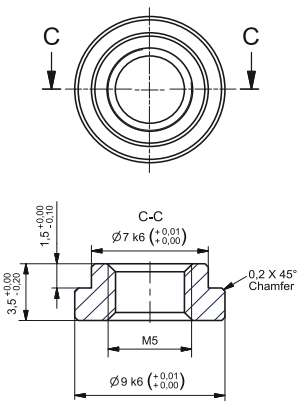

CR 9 / 12

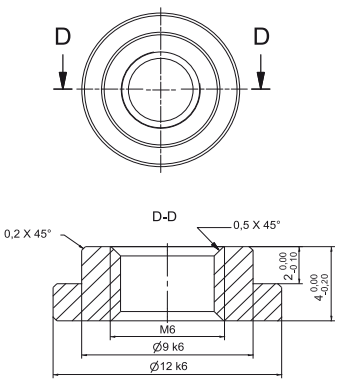

CR 12

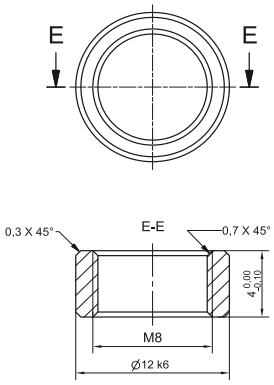

CR 16

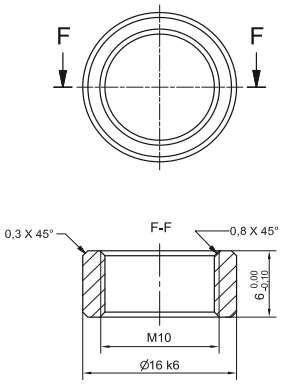



Type	Compatible with	Code
CR 7	MTJ/MRJ/MTJZ/MTV: 40, 65	23332
CR 9	MTJ/MRJ /MTV/MTJZ: 80,110 CTV/CTJ: 90, 110	23331
CR 7/9	MTJ, MRJ, MTV, MTJZ, CTV/CTJ: 90, 110	75114
CR 9/12	MTJ/MRJ /MTV/MTJZ: 80,110 CTV/CTJ: 90, 110, 145	48885
CR 12	CTV/CTJ: 145	49049
CR 16	CTV/CTJ: 200	53023

SLOT NUTS



DIN562



DIN557

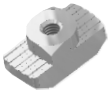

Slot Nut

** - deviating CODE*

LINEAR UNITS - PROFILE

CODE	NUT TYPE	MTJ/MRJ 40	MTV 40	MTJ/MRJ/ MTV/MTJZ 65	MTJ/MRJ/ MTV/MTJZ 80	MTJ/MRJ/MTV MTJZ 110	MTJ 40 ECO	CTV 90 CTJ 90	CTV 110 CTJ 110	CTV 145 CTJ 145	CTV 200 CTJ 200
41609	DIN562 - M2,5		X					X	X	X	
40682	DIN562 - M4	X - *57017		X	X			X			X
40768	DIN562 - M5								X	X	
40769	DIN557 - M5			X	X						
44451	DIN557 - M8					X					X
5746	Slot Nut M6						X				
5551	Slot Nut T-10-M8										X
5552	Slot Nut T-10-M6										X
5553	Slot Nut T-10-M5										X
5570	Slot Nut T-10-M8 L=90										X

LINEAR UNITS - CONNECTION PLATES

CODE	NUT TYPE	CTV 200 CTJ 200
5551	Slot Nut T-10-M8	X
5552	Slot Nut T-10-M6	X
5553	Slot Nut T-10-M5	X
5570	Slot Nut T-10-M8 L =90	X

CODE	NUT TYPE	CTV 145 CTJ 145
5704	Slot Nut 8LM4	X
5703	Slot Nut 8LM5	X
5702	Slot Nut 8LM6	X
5701	Slot Nut 8LM8	X

CODE	NUT TYPE	CTV 110 CTJ 110	CTV 90 CTJ 90
48887	Slot Nut 6LM4	X	X
48888	Slot Nut 6LM5	X	X

In order to improve the products in this catalogue the specifications are subject to change without notice.

MAGNETIC FIELD SENSORS

MTJ / MRJ / MTV

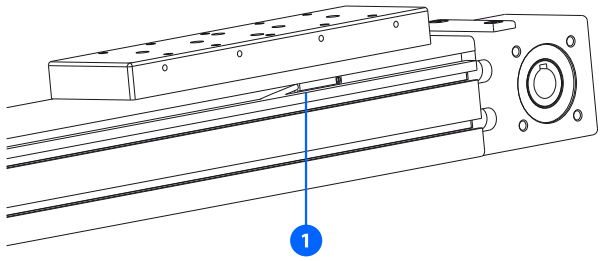

CTV / CTJ

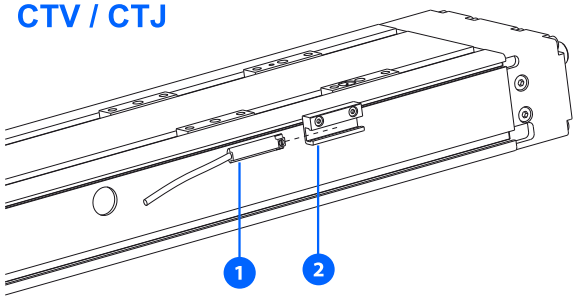

1 - Magnetic field sensor
2 - Sensor holder

*Mounting of Magnetic field sensor on **CTV** and **CTJ** series requires a HOM sensor holder.*

For MTV 40 a HOM sensor holder is also needed. For CTV/CTJ 200 a HOM sensor holder is not needed.

SMT-65TP-K N0 / NC	Code	Type	Compatibility	
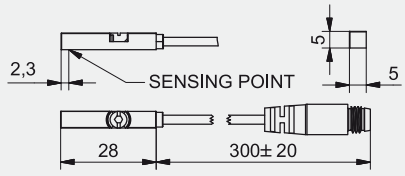	43851	HOM Sensor holder	MTV 40, CTV90, CTV110, CTV145, CTJ90, CTJ110, CTJ145	
	74073	SMT-65TP-K NC	MTJ/MRJ/MTV/MTJZ:40,65,80,110 CTV/CTJ: 200	
	77075	SMT-65TP-K NC + HOM	MTV 40, CTV90, CTV110, CTV145, CTJ90, CTJ110, CTJ145	
	74074	SMT-65TP-K NO	MTJ/MRJ/MTV/MTJZ:40,65,80,110 CTV/CTJ: 200	
	77076	SMT-65TP-K NO + HOM	MTV 40, CTV90, CTV110, CTV145, CTJ90, CTJ110, CTJ145	
Extension cable with connector 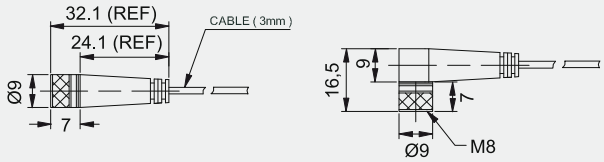	8146	Extension Cable length 2m - Straight connector		
	8147	Extension Cable length 5m - Straight connector		
	9017	Extension Cable length 2m - Angeled connector		
	9019	Extension Cable length 5m - Angeled connector		

TECHNICAL DATA	SMT-65TP-K NC	SMT-65TP-K NO
Sensor Type	GMR sensor	GMR sensor
Switching function	NC	NO
Output	PNP	PNP
Operating voltage	10 ~ 28 V DC	10 ~ 28 V DC
Switching Current	200 mA max.	200 mA max.
Power rating	5,5 W max.	5,5 W max.
Voltage Drop	1,5 V / 200mA max.	1,5 V / 200 mA max.
Current Consumption	10 mA / 24 V max.	10 mA / 24 V max.
Switching Frequency	1000 Hz	1000 Hz
Ambient temperature	-10 ~ +70°C	-10 ~ +70°C
Shock/Vibration	50 G / 9 G	50 G / 9 G
Protection class	IP 67	IP 67
LED indicator	yellow	Yellow
Electrical connection	M8, 3-pin	M8, 3-pin
Cable material length	PU - 0,3 m	PU - 0,3 m
Extension cable	Energy chain compliant	Energy chain compliant

MTJ / MRJ / MTV

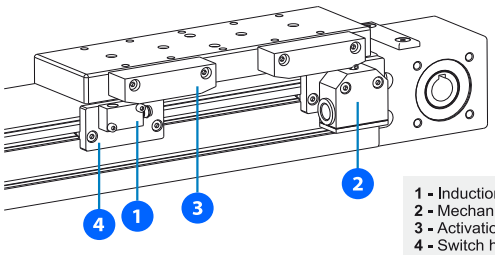

1 - Induction switch
2 - Mechanical switch
3 - Activation block
4 - Switch holder

CTV / CTJ

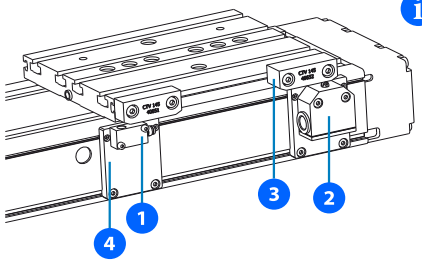

Mounting and using the Induction and Mechanical switch, can be done only if the CTV and CTJ series Linear Units are delivered with Connection plates.

MS- Mehanical switch

TECHNICAL DATA

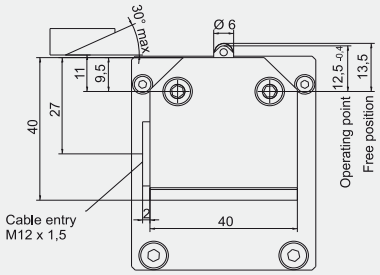

Protection class IEC 60529	IP 67
Ambient temperature	-5°C ...+80°C
Operating point accuracy	± 0.05 mm
Approach speed max.	45 m/min
Approach speed min.	0,01 m/min
Switching contact	1 changeover
Switching principle	Snap-action
Rated voltage	250 V AC
Switching current, min. at	10 mA
Switching voltage	24 V DC
Cable entry	M12 x 1,5

ORDERING CODES		MTJ/MRJ 40	MTJZ 40	MTV 40	MTJ/MRJ/MTV 65 MTJZ 65/80	MTJ/MRJ/MTV 80	MTJ/MRJ/ MTV 110	MTJZ 110	MTJ ECO 40	CTV/CTJ 90	CTV/CTJ 110	CTV/CTJ 145	CTV/CTJ 200
+ 2×	Activation block with fixing screws	43243	52022	43243	43247	43256	47827	63702	49030	49032	49031	40652	40652
	Mechanical switch only	47921											
2× + 2× +	Mechanical switch with mounting elements	40683	104970		40687	40689	47826	63703	49035	49034	49033	47939	53055

IS- Inductive switch

TECHNICAL DATA

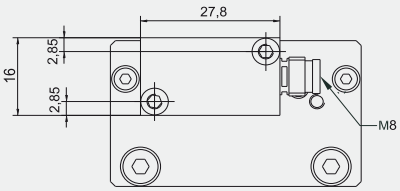

Sensor Type	PNP
Switching function	NC / NO
Rated voltage	10 ~ 30 V DC
Switching Current	150 mA max.
Ambient temperature	-25°C ...+70°C
Switching Frequency	800 Hz max.
Voltage Drop	3,5 V
Protection class	IP 67
Electrical connection	M8, 3-pin

Extension cable with connector

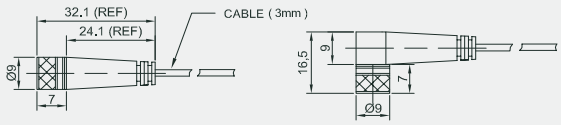

Extension cable	Energy chain compliant - bending radius 75 mm
Cable material-length	PU
Cable length	2m / 5m
Cable length	*M8, 3-pin Straight or Angeled connector*

ORDERING CODES		MTJ/MRJ 40	MTJZ 40	MTV 40	MTJ/MRJ/MTV 65 MTJZ 65/80	MTJ/MRJ/MTV 80	MTJ/MRJ/ MTV 110	MTJZ 110	MTJ ECO 40	CTV/CTJ 90	CTV/CTJ 110	CTV/CTJ 145	CTV/CTJ 200
+ 2×	Activation block with fixing screws	43243	52022	43243	43247	43256	47827	63702	49030	49032	49031	40652	40652
	PNP NO Inductive switch only	40671											
2× + 2× +	**PNP NO** Ind. switch with mounting elements	40680		104968	48026	43233	48047	63705	45105	49039	49038	48058	53054
	PNP NC Inductive switch only	43570											
2× + 2× +	**PNP NC** Ind. switch with mounting elements	48851		104969	40685	47848	47989	63704	45103	49037	49036	47850	53052
	Extension Cable length 2m - Straight connector	8146											
	Extension Cable length 5m - Straight connector	8147											
	Extension Cable length 2m - Angeled connector	9017											
	Extension Cable length 5m - Angeled connector	9019											

In order to improve the products in this catalogue the specifications are subject to change without notice.

MOTOR ADAPTER WITH COUPLING

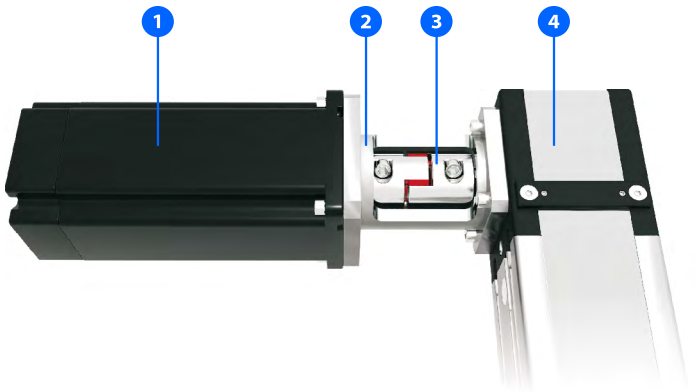

1 - Motor
2 - Motor adapter
3 - Coupling
4 - Linear Unit

VK - CTV110 - SMB60 - GESM14

Motor adapter :
Linear Unit :
Motor type :
According to customer's specification
Coupling type :
See page 8.020.0 or According to customer's specification

COUPLINGS

COUPLING - GESM14 - F8C - F14C

Coupling:
Coupling type / size:
7, 9, 14, 19/24, 24/28, 28/38, 38/45
Option:
C: with keyway
Leave blank: without keyway
Hole diameter

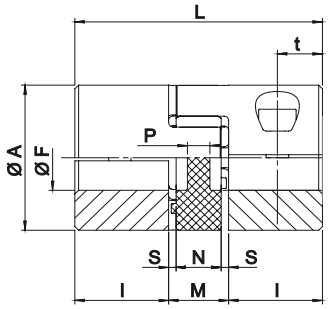

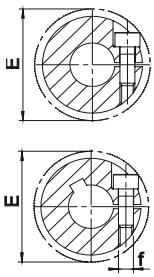

without Keyway

with Keyway

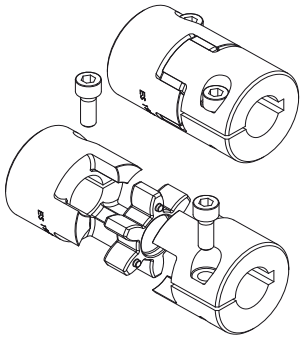

The maximum transmittable torque of the clamping hub depends on the bore diameter (see the upper table on page 8.025.0).

Size	* T_{KN} Nominal [Nm]	* T_{Kmax} [Nm]	Ms [Nm]	Hub W [Kg]	Hub J [Kgm^2]	n_{max} [min^{-1}]	A [mm]	F min [mm]	F max [mm]	f [mm]	L [mm]	l [mm]	M [mm]	N [mm]	S [mm]	P [mm]	t [mm]	E [mm]
7	2	4	0,35	0,003	0,085 x 10	40.000	14	3	7	M2	22	7	8	6	1,0	6	4	15,0
9	5	10	0,75	0,007	0,42 x 10	28.000	20	4	10	M2,5	30	10	10	8	1,0	2	5	23,4
14	12,5	25	1,4	0,018	2,6 x 10	19.000	30	6	16	M3	35	11	13	10	1,5	2	5,5	32,2
19/24	17	34	11	0,071	18,1 x 10	14.000	40	10	20	M6	66	25	16	12	2,0	3,5	12	45,7
24/28	60	120	11	0,156	74,9 x 10	10.600	55	10	32	M6	78	30	18	14	2,0	4	12	56,4
28/38	160	320	25	0,240	163,9 x 10	8.500	65	14	35	M8	90	35	20	15	2,5	5,2	13,5	72,6
38/45	325	650	25	0,440	465,5 x 10	7.100	80	19	45	M8	114	45	24	18	3,0	5,6	16	83,3

The values of nominal T_{KN} and max. T_{Kmax}** transmissible torque in the upper table are valid for coupling with Keyway!*

**for legend see page 8.025.0

Size	Recommended coupling bore diam. and Transmissible Torque [Nm] - valid for shaft tolerances k6 without Keyway																								
	Ø4	Ø5	Ø6	Ø7	Ø8	Ø9	Ø10	Ø11	Ø12	Ø14	Ø15	Ø16	Ø19	Ø20	Ø22	Ø24	Ø25	Ø28	Ø30	Ø32	Ø35	Ø38	Ø40	Ø42	Ø45
7	0,7	0,8	1,0	1,1																					
9	1,1	1,4	1,7	1,9	2,2	2,5	2,8																		
14			2,5	2,9	3,3	3,7	4,1	4,6	5,0	5,8	6,2	6,6													
19/24							23	25	27	32	34	36	43	45											
24/28							23	25	27	32	34	36	43	45	50	54	57	63							
28/38										58	62	66	79	83	91	100	104	116	124	133	145				
38/45													79	83	91	100	104	116	124	133	145	158	166	174	187

Ms	Screw tightening torque	Nm
W	Weight	Kg
J	Coupling moment of inertia	kgm^2
nmax	Maximum rpm	min^{-1}
TKN	Coupling nominal torque	Nm
Tkmax	Coupling maximum torque	Nm

The operating temperature range for the coupling is between -30 and +90°C

SYNCHRONISATION SHAFT OSL

The maximum transmittable torque of the clamping hub depends on the bore diameter (see the upper table on page 8.025.0).

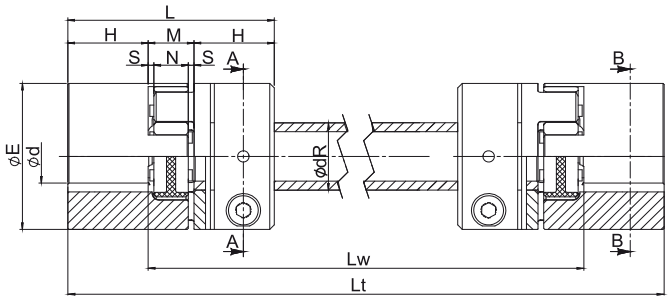

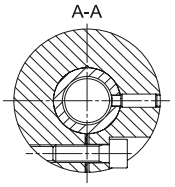

Internal Hub

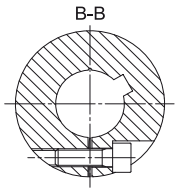

Size	Internal hub		CT [Nm/rad]	E [mm]	H [mm]	ød min [mm]	ød max [mm]	M [mm]	N [mm]	S [mm]	L [mm]	Lw min [mm]	Lt [mm]	dR x thickness [mm]	Weight [kg]	Moment of inertia [10^{-4}kg * m^2]
	Ms [Nm]	MT [Nm]														
14	1,34	6	59	30	11	4	16	13	10	1,5	35	48	on request	14 x 2,0	0,072 + 0,00021 * Lw	10,4 + 0,0076 * Lw
19/24	10	34	314	40	25	6	20	16	12	2	66	82		20 x 3,0	0,284 + 0,00044 * Lw	72,4 + 0,0324 * Lw
24/28	10	45	596	55	30	8	28	18	14	2	78	96		25 x 2,5	0,624 + 0,00048 * Lw	300 + 0,0614 * Lw
28/38	25	105	2868	65	35	10	38	20	15	2,5	90	110		35 x 5,0	0,960 + 0,00128 * Lw	656 + 0,2954 * Lw
38/45	25	123	4521	80	45	12	45	24	18	3	114	138		40 x 5,0	1,760 + 0,00149 * Lw	1862 + 0,4656 * Lw

Ms	Screw tightening torque	Nm
MT	Maximum transmissible torque	Nm
CT	Torsional rigidity per meter	Nm/rad

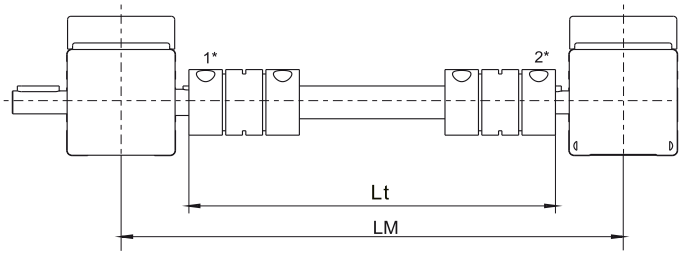

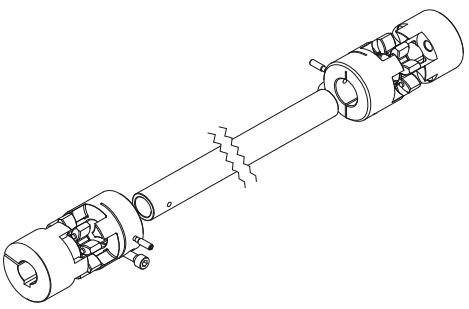

* - see page 8.030.0 for more info

For longer distances Bearing Supports needed. Please contact us.

In order to improve the products in this catalogue the specifications are subject to change without notice.

SYNCHRONISATION SHAFT OSR

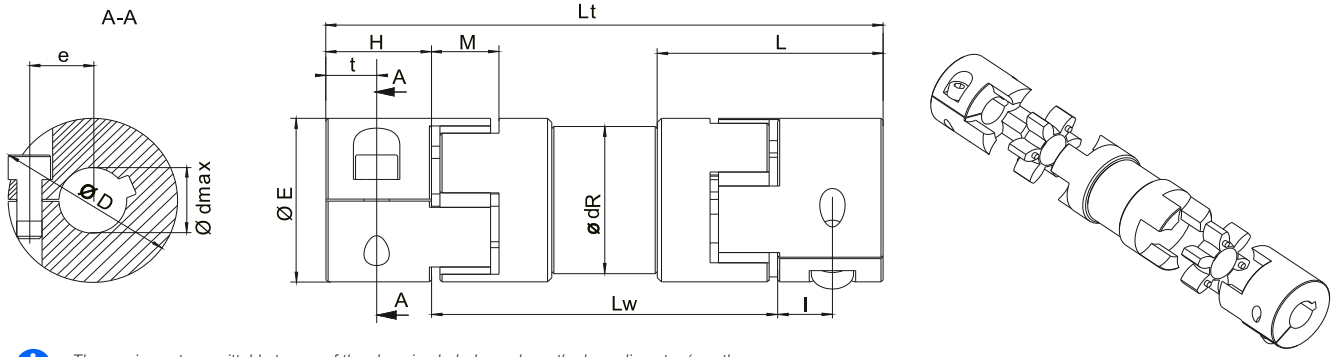

The maximum transmittable torque of the clamping hub depends on the bore diameter (see the upper table on page 8.025.0).

Size	d min [mm]	d max [mm]	Ms [Nm]	MT [Nm]	CT [Nm/rad]	E [mm]	H [mm]	l [mm]	L [mm]	M [mm]	Lw min [mm]	Lt [mm]	D [mm]	t [mm]	e [mm]	dR [mm]	Weight [kg]	Moment of inertia [10^{-6}kg * m^2]
19	10	20	10	39	1630	40	25	13	53,5	16	82	on request	47	12	15	36	0,30 + 0,00058 * Lw	66,0 + 0,1679 * Lw
24	10	28	10	53	3980	55	30	16	63	18	96		57	14	20,8	45	0,62 + 0,00091 * Lw	242 + 0,4099 * Lw
28	14	35	25	137	7494	65	35	20	67	20	110		73	15	25	55	0,98 + 0,00112 * Lw	572 + 0,7717 * Lw
38	15	45	25	180	14540	80	45	25	83,5	24	138		84	20	30	68	1,75 + 0,00140 * Lw	1522 + 1,4975 * Lw

Ms	Screw tightening torque	Nm
MT	Maximum transmissible torque	Nm
CT	Torsional rigidity per meter	Nm/rad

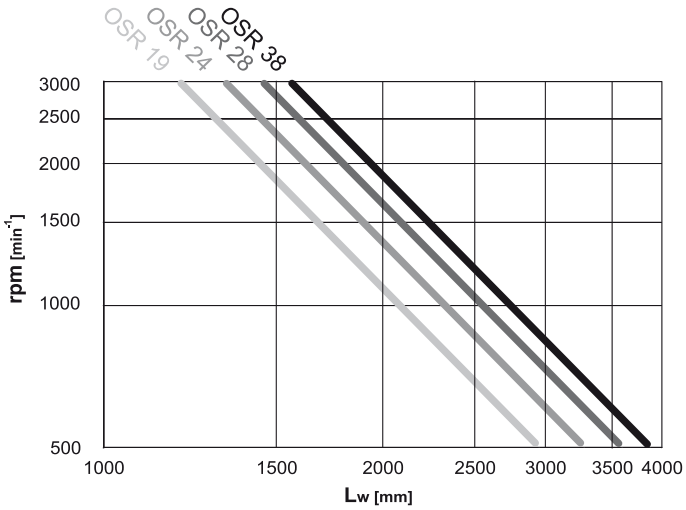

INSTALLATION

The overall length Lt is best determined as the distance between shaft ends - length Lw plus 2x dimension H.

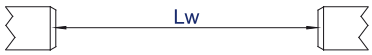

SELECTION DIAGRAM

Ideal execution for long distance shat connections.
Torque transmission is zero backlash. Designed for lengths up to 4m without bearing support (depending on rotation speed).

Standard lenghts available till 3m, for longer lengths please contact us.

HOW TO ORDER

OSR - 19 - MTJ65 - LM - 890 - F16C - F16C

Type:
OSL
OSR

Size:
OSL: 14, 19/24, 24/28, 28/38, 38/45
OSR: 19, 24, 28, 38

Linear unit series:
MTJ/MRJ/MTJ ECO: 40, 65, 80, 110
CTJ: 90, 110, 145, 200
Leave blank : not for linear unit

Length type:
LM (Middle distance of the linear units)
Lt (Production length of the sync. shaft)

Option:
C: with keyway
Leave blank: w/o keyway

Hole diameter:
— one side end hub[1]
--- other side end hub[2]

Length [mm]

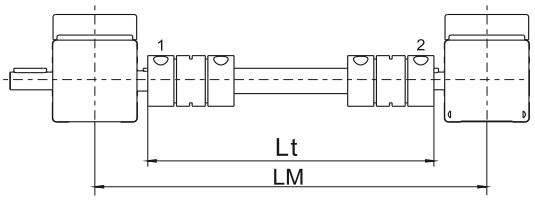

X-Y CONNECTION ELEMENTS

X- Axis MTJ, MRJ, MTV, MTJ ECO, CTV = 0° → Y Axis = 0°

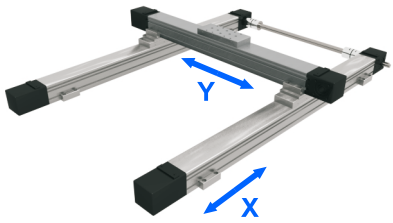

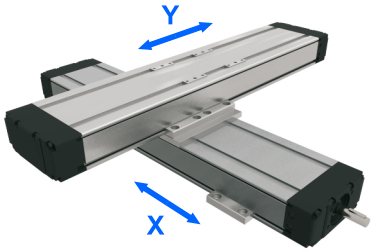

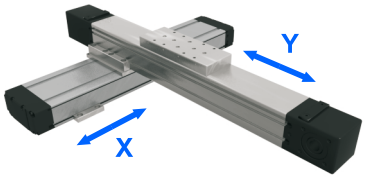

X-Axis	Y-Axis								
	MTJ, MRJ, MTV 40	MTJ, MRJ, MTV 65	MTJ, MRJ, MTV 80	MTJ, MRJ, MTV 110	MTJ 40 ECO	CTV, CTJ 90	CTV, CTJ 110	CTV, CTJ 145	CTV, CTJ 200
MTJ, MRJ, MTV 40	CP M40 0 M40 0	CP M40 0 M65 0			CP M40 0 E40 0	CP M40 0 C90 0			
MTJ, MRJ, MTV 65	CP M65 0 M40 0	CP M65 0 M65 0	CP M65 0 M80 0		CP M65 0 E40 0	CP M65 0 C90 0	CP M65 0 C110 0		
MTJ, MRJ, MTV 80		CP M80 0 M65 0	CP M80 0 M80 0	CP M80 0 M110 0		CP M80 0 C90 0	CP M80 0 C110 0	CP M80 0 C145 0	
MTJ, MRJ 110		CP M110 0 M65 0	CP M110 0 M80 0	CP M110 0 M110 0			CP M110 0 C110 0	CP M110 0 C145 0	CP M110 0 C200 0
MTJ 40 ECO	CP E40 0 M40 0	CP E40 0 M65 0	CP E40 0 M80 0		CP E40 0 E40 0	CP E40 0 C90 0	CP E40 0 C110 0		
CTV, CTJ 90	CP C90 0 M40 0	CP C90 0 M65 0				CP C90 0 C90 0	CP C90 0 C110 0		
CTV, CTJ 110	CP C110 0 M40 0	CP C110 0 M65 0	CP C110 0 M80 0			CP C110 0 C90 0	CP C110 0 C110 0	CP C110 0 C145 0	
CTV, CTJ 145		CP C145 0 M65 0	CP C145 0 M80 0	CP C145 0 M110 0		CP C145 0 C90 0	CP C145 0 C110 0	CP C145 0 C145 0	
CTV, CTJ 200			CP C200 0 M80 0	CP C200 0 M110 0			CP C200 0 C110 0	CP C200 0 C145 0	CP C200 0 C200 0

X- Axis MTJ, MRJ, MTV, MTJ ECO, CTV = 0° → Y Axis = 90°

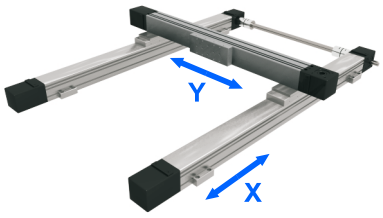

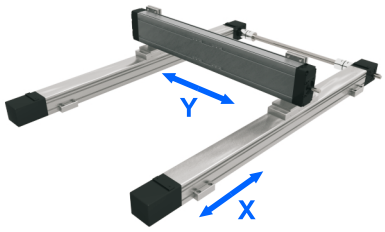

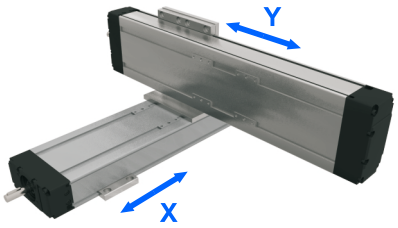

X-Axis	Y-Axis								
	MTJ, MRJ, MTV 40	MTJ, MRJ, MTV 65	MTJ, MRJ, MTV 80	MTJ, MRJ, MTV 110	MTJ 40 ECO	CTV, CTJ 90	CTV, CTJ 110	CTV, CTJ 145	CTV, CTJ 200
MTJ, MRJ, MTV 40	CP M40 0 M40 90	CP M40 0 M65 90			CP M40 0 E40 90	CP M40 0 C90 90			
MTJ, MRJ, MTV 65	CP M65 0 M40 90	CP M65 0 M65 90	CP M65 0 M80 90			CP M65 0 C90 90	CP M65 0 C110 90		
MTJ, MRJ, MTV 80		CP M80 0 M65 90	CP M80 0 M80 90	CP M80 0 M110 90		CP M80 0 C90 90	CP M80 0 C110 90	CP M80 0 C145 90	
MTJ, MRJ 110		CP M110 0 M65 90	CP M110 0 M80 90	CP M110 0 M110 90			CP M110 0 C110 90	CP M110 0 C145 90	CP M110 0 C200 90
MTJ 40 ECO	CP E40 0 M40 90	CP E40 0 M65 90	CP E40 0 M80 90		CP E40 0 E40 90	CP E40 0 C90 90	CP E40 0 C110 90		
CTV, CTJ 90	CP C90 0 M40 90	CP C90 0 M65 90				CP C90 0 C90 90			
CTV, CTJ 110	CP C110 0 M40 90	CP C110 0 M65 90	CP C110 0 M80 90			CP C110 0 C90 90	CP C110 0 C110 90		
CTV, CTJ 145		CP C145 0 M65 90	CP C145 0 M80 90	CP C145 0 M110 90		CP C145 0 C90 90	CP C145 0 C110 90	CP C145 0 C145 90	
CTV, CTJ 200			CP C200 0 M80 90	CP C200 0 M110 90			CP C200 0 C110 90	CP C200 0 C145 90	CP C200 0 C200 90

In order to improve the products in this catalogue the specifications are subject to change without notice.

Y-Z CONNECTION ELEMENTS

Y- Axis MTJ, MRJ, MTV, MTJ ECO, CTV, CTJ = 0° → Z-Axis = 90°

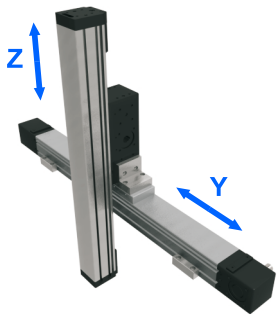

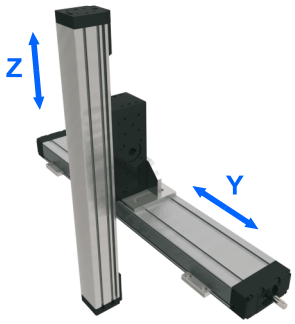

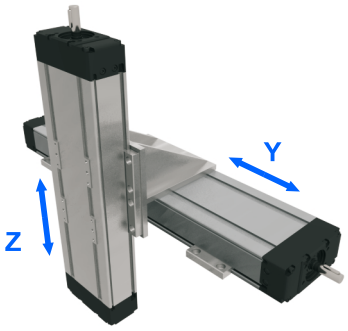

Y-Axis	Z-Axis										
	MTJZ 40	MTJZ 65	MTJZ 80	MTJZ 110	MTV 40	MTV 65	MTV 80	MTV 110	CTV 90	CTV 110	CTV 145
MTJ, MRJ, MTV 40	CP M40 0 Z40				CP M40 0 ZM40						
MTJ, MRJ, MTV 65	CP M65 0 Z40	CP M65 0 Z65			CP M65 0 ZM40	CP M65 0 ZM65					
MTJ, MRJ, MTV 80	CP M80 0 Z40	CP M80 0 Z65	CP M80 0 Z80		CP M80 0 ZM40	CP M80 0 ZM65	CP M80 0 ZM80				
MTJ, MRJ, MTV 110		CP M110 0 Z65	CP M110 0 Z80	CP M110 0 Z110		CP M110 0 ZM65	CP M110 0 ZM80	CP M110 0 ZM110			
MTJ 40 ECO	CP E40 0 Z40										
CTV, CTJ 90	CP C90 0 Z40	CP C90 0 Z65			CP C90 0 ZM40				CP C90 0 ZC90		
CTV, CTJ 110	CP C110 0 Z40	CP C110 0 Z65	CP C110 0 Z80		CP C110 0 ZM40	CP C110 0 ZM65	CP C110 0 ZM80		CP C110 0 ZC90	CP C110 0 ZC110	
CTV, CTJ 145	CP C145 0 Z40	CP C145 0 Z65	CP C145 0 Z80	CP C145 0 Z110		CP C145 0 ZM65	CP C145 0 ZM80	CP C145 0 ZM110	CP C145 0 ZC90	CP C145 0 ZC110	CP C145 0 ZC145
CTV, CTJ 200			CP C200 0 Z80	CP C200 0 Z110			CP C200 0 ZM80	CP C200 0 ZM110		CP C200 0 ZC110	CP C200 0 ZC145

CONNECTION ELEMENTS FOR CUNSTRICTIONS WITH ALU PROFILES

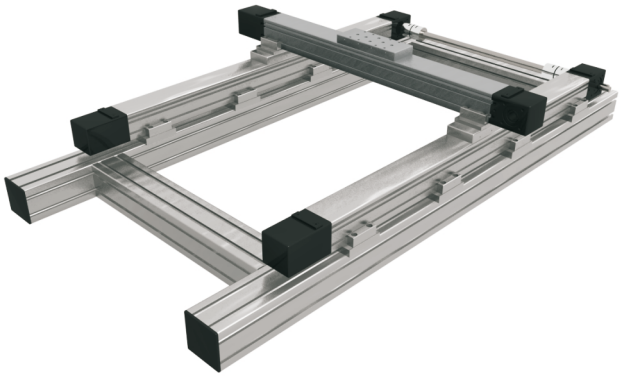

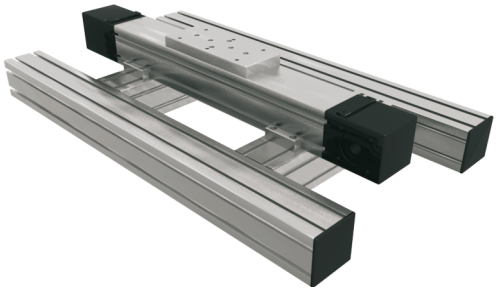

Linear Unit must be mounted by the aluminium profile and not at the end blocks!

For more details about Alu profiles see PROFILE TECHNIC catalogue.



MULTI AXIS SYSTEMS

We offer all neccessary fittings including brackets, clamping fixtures and adapter plates in order to build multi-axis systems. Beside standard elements we supply also custom fixing and connection elements manufactured in our workshop.

1



2



3



4

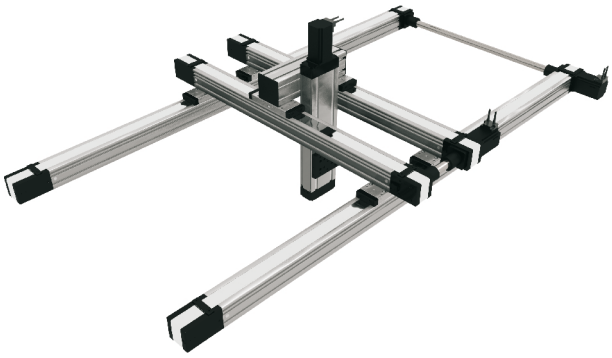

5

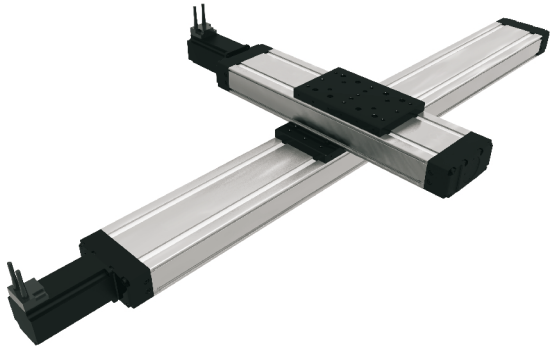

6

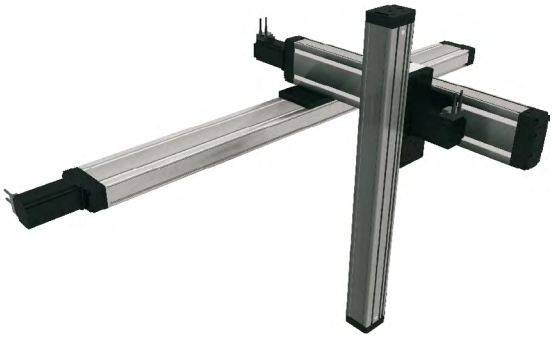

In order to improve the products in this catalogue the specifications are subject to change without notice.

MULTI AXIS SYSTEMS

7

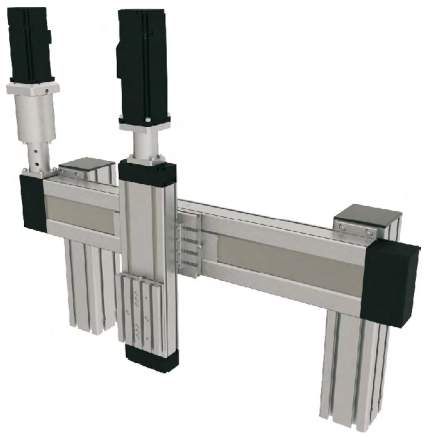

8



9



10

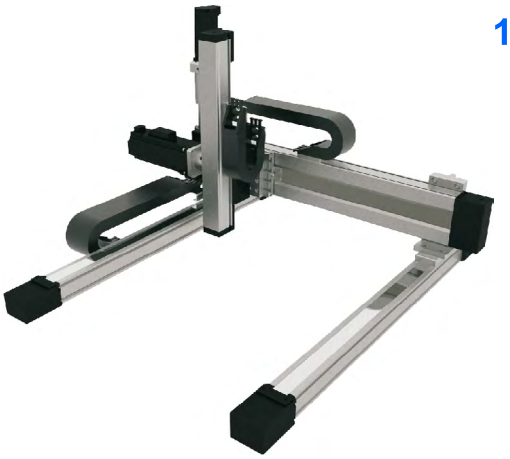

Service life / Permissible load factor

SERVICE LIFE - LINEAR GUIDING

Mean load comparison factor f_{vm} as a function of service life L_{km}

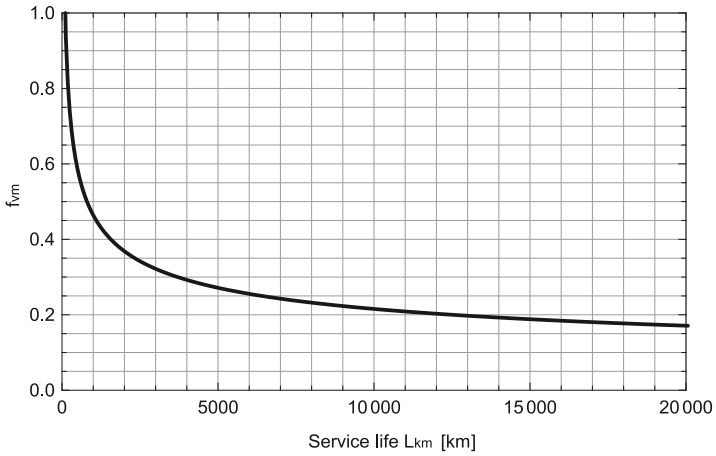

Diagrams and equations are valid for:

- *MTJ series*
- *MTV series*
- *MTJ ECO series*
- *MTJZ series*
- *CTJ series*
- *CTV series*

Presented diagrams are showing theoretically determined service life of the linear guiding when mean load comparison factor fvm is taken into consideration.

Detailed view:

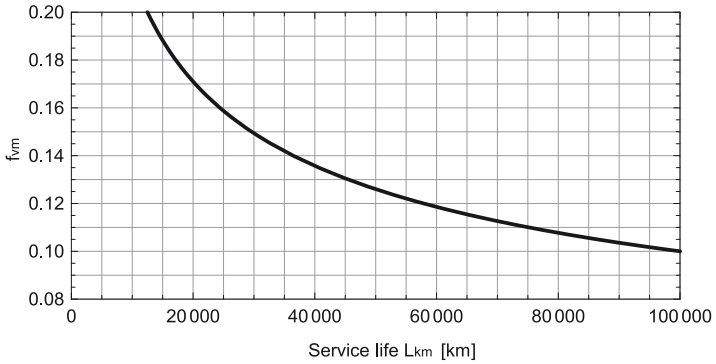

Load comparison factor f_v:

$$f_v = \frac{|Fy|}{Cdyn} + \frac{|Fz|}{Cdyn} + \frac{|Mx|}{Mx\,dyn} + \frac{|My|}{My\,dyn} + \frac{|Mz|}{Mz\,dyn}$$

fv	Load comparison factor	
Cdyn	Dynamic load capacity	N
Mx dyn	Dynamic moment capacity about the x axis	Nm
My dyn	Dynamic moment capacity about the y axis	Nm
Mz dyn	Dynamic moment capacity about the z axis	Nm
Fy	Applied force in the y direction	N
Fz	Applied force in the z direction	N
Mx	Applied moment about the x axis	Nm
My	Applied moment about the y axis	Nm
Mz	Applied moment about the z axis	Nm

Service life calculation:

$$L_{km} = \left(\frac{1}{f_{vm}}\right)^3 \cdot 10^2$$

L_{km} Service life [km]

Safety factor f_s:

$$f_s = \frac{1}{f_{vm}}$$

fs Safety factor

The safety factor depends on the application and its requested safety. We recommend a minimum safety factor fs = 5.0

Mean load comparison factor f_{vm} calculation:

$$f_{vm} = \sqrt[3]{\frac{fv1^3 \times s1 + fv2^3 \times s2 + \ldots + fvn^3 \times sn}{s1 + s2 + \ldots + sn}}$$

fvm	Mean load comparison factor
fv i	i-th load comparison factor of a given loading regime fv (s), i ∈ {1,2,...,n}
si	i-th travel path of a given loading regime fv (s), i ∈ {1,2,...,n}

Loading regime fv (s):

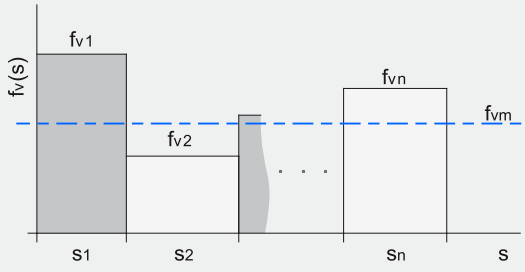

PERMISSIBLE LOAD FACTOR fp - LINEAR GUIDING

$$f_p = \frac{|Fy|}{Fpy} + \frac{|Fz|}{Fpz} + \frac{|Mx|}{Mpx} + \frac{|My|}{Mpy} + \frac{|Mz|}{Mpz} \leq 1$$

fp	Permissible load factor	
Fpy	Max. permissible force in the y axis	N
Fpz	Max. permissible force in the z axis	N
Mpx	Max. permissible moment about the x axis	Nm
Mpy	Max. permissible moment about the y axis	Nm
Mpz	Max. permissible moment about the z axis	Nm

SERVICE LIFE - BALL SCREW

Applied mean axial force F_{am} as a function of service life L_{km}

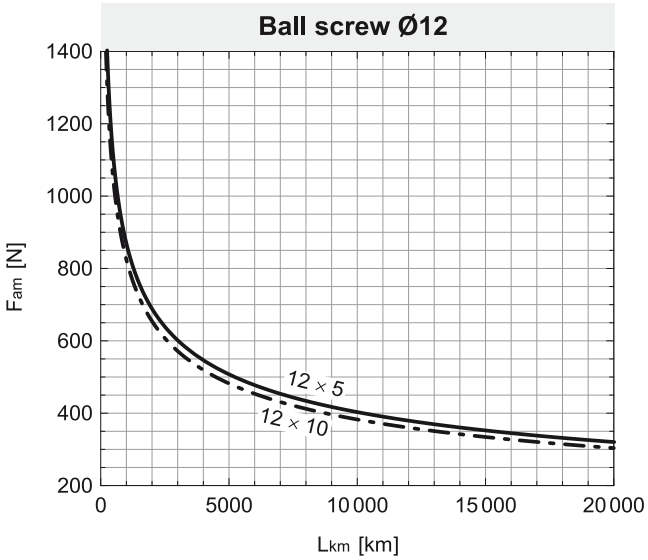

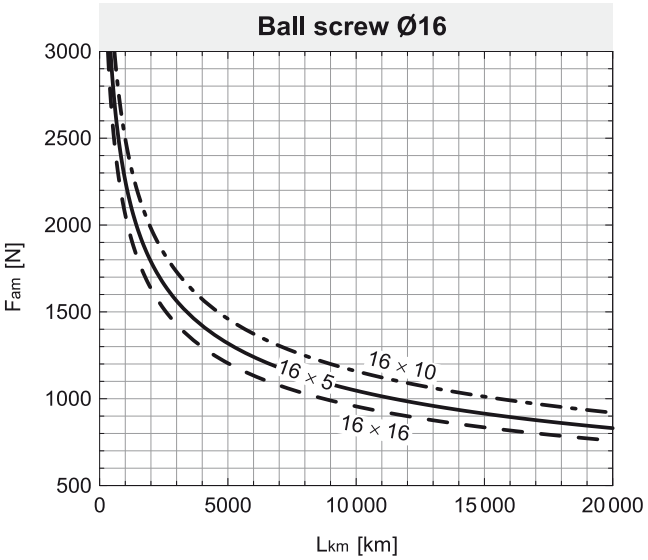

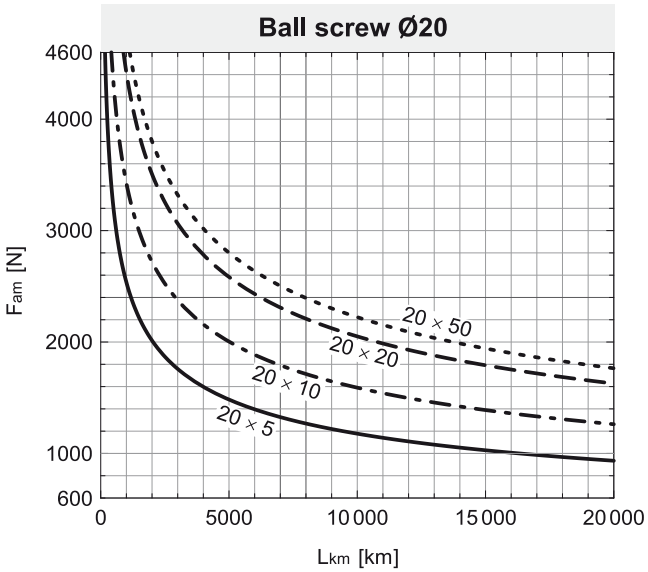

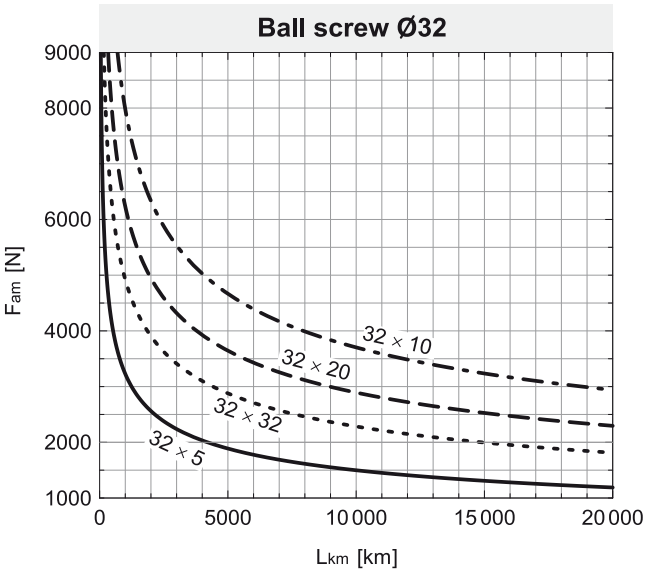

Mean axial force F_{am} calculation:

$$F_{am} = \sqrt[3]{\frac{|F_{a1}|^3 \times s_1 + |F_{a2}|^3 \times s_2 + \ldots + |F_{an}|^3 \times s_n}{s_1 + s_2 + \ldots + s_n}}$$

Fam	Mean axial force
Fa i	i-th axial force of a given loading regime Fa (s), i ∈ {1,2,...,n}
si	i-th travel path of a given loading regime Fa (s), i ∈ {1,2,...,n}

Diagrams presented above are showing theoretically determined service life of the ball screw when mean axial force Fam is taken into consideration.

Loading regime Fa (s):

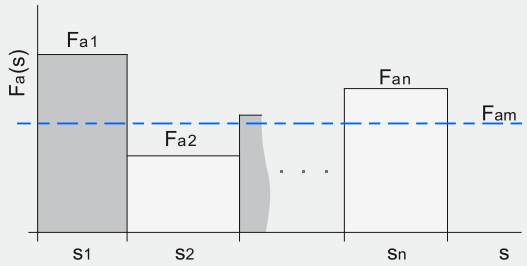

Diagrams and equations are valid for:

- *MTV series*
- *CTV series*

In order to improve the products in this catalogue the specifications are subject to change without notice.

UNIMOTION



We cover all major markets. If you wish to contact us, send us an enquiry and we would be happy to assist you.

GERMANY

Unimotion GmbH
Walramstraße 23
D-65510 Idstein

www.unimotion.de
vertrieb@unimotion.de

NORTH AMERICA

Unimotion North America, Inc.
3952 Ben Hur Ave, Unit 5
Willoughby, OH 44094

www.unimotionusa.com
info@unimotionusa.com

Unimotion: 2020